(06-26-18 Updated)

OAK PARK HEIGHTS ZONING ORDINANCE

TABLE OF CONTENTS

Page

Administrative Sections

401.01 - Title and Application
- 401.01.A Title 01-1
- 401.01.B Purpose 01-1
- 401.01.C Intent 01-1
- 401.01.D Relation to Comprehensive Municipal Plan 01-1
- 401.01.E Standard Requirements 01-1
- 401.01.F Conditional Uses 01-2
- 401.01.G Monuments 01-2
- 401.01.H Uses Not Provided Within Zoning Districts 01-2
- 401.01.I Separability 01-3
- 401.01.J Authority 01-3
- 401.01.K Comprehensive Revision 01-3

401.02 - Rules and Regulations
- 401.02.A Rules of Word Construction 02-1
- 401.02.B Definitions 02-1

401.03 - Administration - Amendments and Conditional Use Permits
- 401.03.A Procedure 03-1
- 401.03.B Amendments - Initiation 03-4
- 401.03.C Conditional Use Permit 03-4

401.04 - Administration - Variances and Appeals
- 401.04.A General Provisions and Standards 04-1
- 401.04.B Procedures 04-3
- 401.04.C Lapse of Variance 04-6
- 401.04.D Performance Bond 04-6
- 401.04.E Appeals 04-7

401.05 - Administration - Interim Uses
- 401.05.A Purpose 05-1
- 401.05.B Procedure 05-1
- 401.05.C General Standards 05-1
- 401.05.D Termination 05-2

Page

401.06 - Administration - Planned Unit Development
401.06.A Purpose 06-1
401.06.B General Requirements and Standards 06-2
401.06.C General Concept Stage 06-8
401.06.D General Plan of Development 06-14
401.06.E Final Plan 06-20
401.06.F PUD Progress Evaluation 06-22
401.06.G Amendment of a PUD Permit 06-23
401.06.H General Requirements 06-23

401.07 - Administration and Enforcement
401.07.A Administrating Officer 07-1
401.07.B Duties of the Administrative Office 07-1

401.08 - Fees
401.08.A Base Fees 08-1
401.08.B Development Application Costs 08-1
401.08.C Payment Schedule 08-1
401.08.D Development Review 08-1

401.09 - Violations and Penalties
401.09.A Administration and Enforcement 09-1

401.10 - Certificate of Occupancy
401.10.A Administration and Enforcement 10-1
401.10.B Penalties, Violation and Enforcement 10-1

401.11 - 401.14 - Reserved

General Development and Performance Standards

401.15 - General Provisions
401.15.A Non-Conforming Buildings, Structures,
Uses and Lots 15-1
Purpose 15-1
Continued Non-Conformity 15-1
Repairing 15-1
Moving 15-1
Changing Uses 15-1
Changing Use to Lessen a Non-Conformity 15-1
Destroyed Non-Conforming Use 15-1
Discontinuing Use 15-2

		Page
	Alterations	15-2
	Expansion	15-2
	Constructing a Non-Conforming Use	15-3
	Junk Yard	15-3
	Legal Non-Conforming Lots	15-3
	Hazardous Non-Conformities	15-4
401.15.B	General Building and Performance Standards	15-4
	Purpose	15-4
	Dwelling Unit Restriction	15-4
	Survey and Site Plan Requirement	15-5
	Lot Provisions	15-5
	Grading and Drainage	15-6
	Traffic Sight Visibility Triangle	15-6
	Outdoor Lighting	15-7
	Smoke	15-10
	Dust and Other Particulated Matter	15-10
	Odors	15-11
	Noise	15-11
	Vehicles	15-11
	Refuse	15-11
	Exterior Storage	15-11
	Waste Material	15-12
	Bulk Storage (Liquid)	15-12
	Radiation Emission	15-12
	Electrical Emission	15-12
	Building Security	15-12
	Sales in Residential/Commercial Areas	15-12
401.15.C	General Yard, Lot Area and Building Regulations	15-13
	Yard Requirements	15-13
	Lot Area Per Unit	15-16
	Building Height Exceptions	15-16
	Roof Equipment	15-17
	Minimum Floor Area Per Dwelling Unit	15-17
	Single Family Dwelling - Building Requirements	15-18
	Building Type and Construction	15-18
401.15.D	Accessory Buildings, Structures, Uses and Equipment	15-24
	Connection with Principal Building	15-24
	Location	15-24
	Height/Setbacks	15-24
	Lot Coverage	15-24

		Page
	Number of Structures	15-24
	Size	15-25
	Administrative Approvals	15-25
	Building Permit	15-25
	Accessory Uses	15-25
	Compatibility	15-25
	Temporary Accessory Structures	15-25
	Trash Receptacles	15-26
	Conditional Use Permits	15-26
401.15.E	Fencing/Screening/Landscaping	15-27
	Building Permit	15-27
	Application Requirements	15-27
	General Provisions	15-27
	Specific Fence Standards	15-28
	Swimming Pool Fences	15-29
	Non-Conforming Fences	15-29
	General Landscaping and Maintenance	15-29
	Required Fencing and Screening	15-30
	Required Landscaping - General Residential	15-30
	Required Landscaping - Public, Institutional, Semi-Public and All Income Producing Properties	15-30
401.15.F	Off-Street Parking and Loading	15-32
	Off-Street Parking Purpose	15-32
	Application of Off-Street Parking Regulations	15-32
	Site Plan Drawing Necessary	15-33
	General Provisions	15-33
	Maintenance	15-39
	Location	15-39
	Use of Required Area	15-40
	Handicapped Parking Spaces	15-40
	Number of Spaces Required	15-40
	Joint Facilities	15-45
	Off-Site Parking	15-46
	Off-Street Loading Purpose	15-47
	Location	15-47
	Surfacing	15-48
	Accessory Use, Parking and Storage	15-48
	Screening	15-48
	Size	15-48
	Number of Loading Berths Required	15-48

		Page
401.15.G	Signs	15-50
	Findings, Purpose and Effect	15-50
	Substitution Clause	15-51
	Conflict with Zoning Ordinance	15-51
	General Provisions	15-51
	Permitted Signs in Any Zoning District	15-53
	Prohibited Signs in Any Zoning District	15-54
	Special Events	15-55
	District Regulations	15-57
	Special District Provisions	15-61
	Changeable Copy Signs	15-63
	Non-Conforming Signs	15-64
	Maintenance	15-65
	Inspection	15-65
	Sign Permit and Application	15-65
	Removal of Unsafe and Illegal Signs	15-66
	Variances	15-68
401.15.H	Site Building Plan Review	15-69
	Purpose	15-69
	Plan Required	15-69
	Plan Review/Approval	15-69
	Plan Agreements	15-69
	Enforcement	15-69
401.15.I	Land Reclamation and Mining	15-69
	Permit Required	15-69
	Application and Required Information	15-69
	Technical Reports	15-70
	Issuance of Permit	15-71
	Conditions of Operation	15-71
	Security	15-71
	Failure to Comply	15-71
	Completion of Operation	15-72
401.15.J	Building Relocation	15-72
	Review Process	15-72
	Performance Standards	15-73
	Occupancy	15-73
	Performance Security	15-73

		Page
401.15.K	Model Homes	15-73
	Purpose	15-73
	Procedure	15-73
	Special Requirements	15-73
401.15.L	Sexually Oriented Uses	15-74
	Purpose	15-74
	Sexually Oriented Use - General	15-74
	Sexually Oriented Use - Principal	15-75
	Sexually Oriented Uses - Accessory	15-76
401.15.M	Home Occupations	15-77
	Purpose	15-77
	Procedures and Permits	15-77
	Requirement-General Provisions	15-78
	Transient Lodging	15-80
	Non-Conforming Uses	15-81
	Inspection	15-81
401.15.N	Day Care Nursery Facilities	15-81
	Purpose	15-81
	Application	15-82
	Declaration of Conditions	15-82
	Site Plan Drawing Necessary	15-82
	General Provisions	15-82
	Non-Conforming Use	15-83
	Inspection	15-83
401.15.O	Animals	15-83
	Keeping Animals	15-83
401.15.P	Antennas	15-83
	General Standards	15-83
	Accessory and Secondary Use Antennas	15-85
	Cellular Telephone Antennas	15-85
	Satellite Dishes	15-90
	Commercial and Public Radio and Television Transmitting Antennas, and Public Utility Microwave Antennas	15-91
401.15.Q	Essential Services	15-91
	Purpose	15-91
	Special Permit Required	15-91
	City Approval Required	15-91
	Conditional Use Permit Required	15-92

Page

401.15.R Public Property/Right-of-Way 15-93
Coverage 15-93
Liability 15-93

401.15.S Subdivision of Two Family Lots 15-94
General Requirements 15-94
Usable Open Space 15-95

401.16 - Design Guidelines 16-1

401.17 - Alternative Energy Systems
401.17.A Scope 17-1
401.17.B Purpose and Intent 17-1
401.17.C Definitions 17-1
401.17.D Application 17-4
401.17.E Solar Energy Systems 17-4
401.17.F Wind Energy Systems 17-6
401.17.G Ground Source Heat Pumps (Geothermal Heating) 17-8
401.17.H Conditional Use Permits 17-10
401.17.I Zoning District Allowance Summary Table 17-11

401.18 - 401.19 Reserved

Zoning Districts

401.20 - General District Provisions
401.20.A Establishment of Districts 20-1
401.20.B Map 20-1
401.20.C Annexed Territory 20-2
401.20.D Zoning District Boundaries 20-2

401.21 - O, Open Space Conservation District
401.21.A Purpose 21-1
401.21.B Permitted Uses 21-1
401.21.C Interim Uses 21-1
401.21.D Accessory Uses 21-1
401.21.E Conditional Uses 21-2

401.22 - R-1, Single Family Residential District
401.22.A Purpose 22-1
401.22.B Permitted Uses 22-1
401.22.C Interim Uses 22-1
401.22.D Accessory Uses 22-1
401.22.E Conditional Uses 22-2

Page

401.23 - R-1A, Single Family Residential District
401.23.A Purpose 23-1
401.23.B Permitted Uses 23-1
401.23.C Interim Uses 23-1
401.23.D Accessory Uses 23-1
401.23.E Conditional Uses 23-1

401.24 - R-1B, Single Family Residential District
401.24.A Purpose 24-1
401.24.B Permitted Uses 24-1
401.24.C Interim Uses 24-1
401.24.D Accessory Uses 24-1
401.24.E Conditional Uses 24-1

401.25 - R-1C, Single Family Residential District
401.25.A Purpose 25-1
401.25.B Permitted Uses 25-1
401.25.C Interim Uses 25-1
401.25.D Accessory Uses 25-1
401.25.E Conditional Uses 25-1

401.26 - R-2, Low and Medium Density Residential District
401.26.A Purpose 26-1
401.26.B Permitted Uses 26-1
401.26.C Interim Uses 26-1
401.26.D Accessory Uses 26-1
401.26.E Conditional Uses 26-1

401.27 - R-3, Multiple Family Residential District
401.27.A Purpose 27-1
401.27.B Permitted Uses 27-1
401.27.C Interim Uses 27-1
401.27.D Accessory Uses 27-1
401.27.E Conditional Uses 27-1

401.28 - R-B, Residential Business Transitional District
401.28.A Purpose 28-1
401.28.B Permitted Uses 28-1
401.28.C Interim Uses 28-1
401.28.D Accessory Uses 28-1
401.28.E Conditional Uses 28-1

401.29 - B-1, Neighborhood Business District
401.29.A Purpose 29-1
401.29.B Permitted Uses 29-1

Page

401.29.C Interim Uses 29-1
401.29.D Accessory Uses 29-1
401.29.E Conditional Uses 29-2

401.30 - B-2, General Business District
401.30.A Purpose 30-1
401.30.B Permitted Uses 30-1
401.30.C Interim Uses 30-2
401.30.D Accessory Uses 30-2
401.30.E Conditional Uses 30-5

401.300 - B-3, Highway Business and Warehousing District
401.300.A Purpose 300-1
401.300.B Permitted Uses 300-1
401.300.C Interim Uses 300-2
401.300.D Accessory Uses 300-2
401.300.E Conditional Uses 300-2
401.300.F Access 300-14
401.300.G Lot Coverage 300-15
401.300.H Building Type and Construction 300-15
401.300.I Parking 300-15
401.300.J Loading 300-16
401.300.K Trash Receptacles 300-16
401.300.L Screening 300-17
401.300.M Landscaping 300-17

401.301 – B-4, Limited Business District
401.301.A Purpose 301-1
401.301.B Permitted Uses 301-1
401.301.C Interim Uses 301-2
401.301.D Accessory Uses 301-2
401.301.E Conditional Uses 301-4

401.31 - B-W, Business/Warehousing
401.31.A Purpose 31-1
401.31.B Permitted Uses 31-1
401.31.C Interim Uses 31-1
401.31.D Accessory Uses 31-1
401.31.E Conditional Uses 31-2
401.31.F Access 31-3
401.31.G Lot Coverage 31-3
401.31.H Building Type and Construction 31-4
401.31.I Parking 31-4
401.31.J Loading 31-4
401.31.K Trash Receptacles 31-5

Page

401.31.L Screening 31-5
401.31.M Landscaping 31-6

401.32 - I, Industrial District
401.32.A Purpose 32-1
401.32.B Permitted Uses 32-1
401.32.C Interim Uses 32-2
401.32.D Accessory Uses 32-2
401.32.E Conditional Uses 32-2

401.320 - P-I, Public-Institutional District
401.320.A Purpose 320-1
401.320.B Permitted Uses 320-1
401.320.C Interim Uses 320-1
401.320.D Accessory Uses 320-1
401.320.E Conditional Uses 320-2
401.320.F Lot Requirements and Setbacks 320-9

401.33 - PUD, Planned Unit Development
401.33.A Purpose 33-1
401.33.B Application 33-1
401.33.C Special Procedures 33-1

401.34 - River Impact
401.34.A Purpose 34-1
401.34.B District Boundary and Application 34-1
401.34.C Development Regulations 34-1
401.34.D Development Permit Procedure 34-1

APPENDIX A

OAK PARK HEIGHTS ZONING ORDINANCE AMENDMENTS

Reference Number	Ordinance Number	Date Adopted	
1	97-401-02	October 14, 1997	
2	98-401-01	April 28, 1998	
3	98-401-02	May 12, 1998	
4	98-401-04	August 11, 1998	
5	99-401-01	January 26, 1999	
6	99-401-08	October 26, 1999	
7	99-401-09	October 26, 1999	
8	99-401-10	November 9, 1999	
9	00-401-02	May 23, 2000	
10	01-401-02	March 27, 2001	
11	01-401-03	March 27, 2001	
12	03-401-01	February 6, 2003	
13	03-06-32	June 10, 2003	
14	2004-401-01	May 25, 2004	
15	2004-401-02	October 26, 2004	
16	2005-03	July 26, 2005	
17	2006-401-04	August 22, 2006	
18	2008-401-02	April 22, 2008	B-2 District Interim Uses
19	2008-401-05	October 28, 2008	Special Event Signage
20	07-401-06	October 23, 2007	B-3 District
21	2009-401-01	March 24, 2009	Accessory Buildings
22	2009-401-03	October 27, 2009	Special Event Signage – Destination Retail Highway District
23	2009-401-05	December 22, 2009	401.15.E. – Fencing, Screening & Landscaping
24	2010-401-01	February 23, 2010	401.16 – Design Guidelines (Repeal 1998 & Adopt 2010)
25	2010-401-02	May 25,2010	401.15.C.8 – Building Types and Construction.
26	2010-401-05	November 23, 2010	401.17 – Alternative Energy Systems Ordinance; inclusion of 401.17 definitions to 401.02.B. definitions; and reference alternative energy systems as an accessory use as regulated by 401.17 in sections D of 401.21, 22, 29, 300, 31, 32 and 320.
27	2011-401-01	August 23, 2011	Districts 401.28, 401.30, 401.300, 401.301, 401.320 – Conditional Uses Amendment adding allowance for building in excess of three (3) stories or thirty-five (35) feet.
28	2013-401-01	January 22, 2013	Districts 401.30 & 401.301 – Accessory Uses Amendment adding Temporary Outside Sales With Yearly Administrative Permit.

29	2013-401-02	February 26, 2013	Districts 401.30 & 401.301 – Accessory Uses Amendment adding Animal Care Services With Yearly Administrative Permit.
30	2013-401-04	May 29, 2013	Section 401.300.E.5 – Allowing Automotive and Boat, Frame and Body Repair as a Conditional Use Within the B-3 Highway Business and Warehouse District; and Deleting Section 401.300.E.6 of Conditional Uses and renumbering those from thereon.
31	2013-401-05	May 29, 2013	Section 401.15.G.8. – Amended to allow pennants as an allowable Sign Type Under the Special Event s Provisions.
32	2013-401-08	December 26, 2013	Section 401.15.M.3.c. – Amend to clarify special home occupation requirements with revisions to 3 and addition of 4 to section c.
33	2014-401-01	January 14, 2014	Definitions & Section 401.15.G – Amendments related to electronic message board regulations.
34	2014-401-05	June 10, 2014	401.15.F.h.17 – Amend to clarify setbacks applied to lot lines and right of way
35	2015-401-01	September 22, 2015	Definitions & Section 401.15.E – Amendments related to fencing standards.
36	2015-401-02	October 27, 2015	Definitions & Section 401.15.G – Amendments related to sign standards.
37	2016-401-05	June 27, 2016	Sections 401.300.E.17 & 18 CUP Additions to B-3 Highway Business and Warehouse Zoning District.
38	2016-401-07	July 26, 2016	Definitions & Section 401.15.M – Amendments related to Transient Lodging.
39	2017-401-04	October 10, 2017	Definitions & Sections 401.15.C.8 & 401.15.D.15 – Amendments related to Accessory Building Regulations and Allowances for Temporary Structures.
40	2018-704-02	February 13, 2018	Definitions & Sections 401.15.C.8 & 401.15.P – Amendments related to Small Cell Wireless Facilities.
41	2018-401-05	April 10, 2018	Definitions & Section 401.15.E Amendments related to Fence Height Standards.
42	2018-401-07	June 26,2018	401.15.D.11 Temporary Accessory Structures-Amendment, adding section (e) for 24 month continuous use with Interim Use Permit.

CHAPTER 401

OAK PARK HEIGHTS ZONING ORDINANCE

401.01. TITLE AND APPLICATION

401.01.A. Title. This Ordinance shall be known as the "Oak Park Heights Zoning Ordinance" except as referred to herein, where it shall be known as "this Ordinance".

401.01.B. Purpose. This is an ordinance for the purpose of promoting and protecting the public health, safety and general welfare, by regulating the location, size of buildings and other structures; the percentage of lot which may be occupied; the size of yards and other open spaces; the density of distribution of population; the uses of buildings and structures for trade, industry, residence, recreation, public activities or other purposes; and the use of land for trade, industry, residence, recreation, forestry, soil conservation, water supply conservation, conservation of shorelands, flood control and other purposes and establishing standards and procedures regulating such uses.

401.01.C. Intent. These provisions are intended to provide for adequate light and air, safety and fire and other danger; prevent undue concentration of population; provide ample parking facilities; regulate the location and operation of businesses, industries, dwelling and buildings for other specified purposes; preserve property values by providing for orderly and compatible development of the various land uses; encourage energy conservation and the use of renewable energy resources; provide for administration of this Ordinance; provide for amendments hereto; and provide for official recording of this Ordinance and all amendments hereto.

401.01.D. Relation to Comprehensive Municipal Plan. It is the policy of the City of Oak Park Heights that the enforcement, amendment, and administration of this Ordinance be accomplished with due consideration of the recommendations contained in the City Comprehensive Plan as developed and amended from time to time by the City Council for the City. The City Council recognizes the City Comprehensive Plan as the policy for guiding land use and development in accordance with the policies and purpose herein set forth.

401.01.E. Standard Requirements.

1. Where the conditions imposed by any provision of this Ordinance are either more or less restrictive than comparable conditions imposed by other ordinance, rule or regulation of the City, the ordinance, rule or regulation which imposes the more restrictive condition, standard, or requirements shall prevail.

2. In their interpretation and application, the provisions of this Ordinance shall be held to the minimum requirements for the promotion of the public health, safety and welfare.

3. No structure shall be erected, converted, enlarged, reconstructed or altered, and no structure or land shall be used for any purpose nor in any manner which is not in conformity with the provisions of this Ordinance.

4. Except as herein provided, no building, structure or premises shall hereafter be used or occupied and no building permit shall be granted that does not conform to the requirements of this Ordinance.

5. No yard or lot existing at the time of passage of this Ordinance shall be reduced in dimension or area below the minimum requirements set forth herein. Yards or lots created after the effective date of this Ordinance shall meet at least the minimum requirements established by this Ordinance.

6. In their application, these regulations shall not abrogate any easement, covenant, or any other private agreement where such is legally enforceable, provided that where the regulations of this Ordinance are more restrictive, or impose higher standards or requirements than such easements, covenants, or other private agreements, the requirements of this Ordinance shall be controlling.

401.01.F. Conditional Uses. Any established use or building legally existing prior to the establishment of this Ordinance and which is now classified as a conditional use may be continued in like fashion and activity and shall automatically be considered as having received conditional use permit approval. Any change to such a use, or any other subsequently approved conditional use shall, however, require a new conditional use permit be processed according to this Ordinance.

401.01.G. Monuments. For the purpose of this Ordinance, all international, federal, state, county and other official monuments, benchmarks, triangulation points, and stations shall be preserved in their precise locations; and it shall be the responsibility of the applicant to ensure that these markers are maintained in good condition during and following construction and development. All section, one-quarter section and one-sixteenth section corners shall be duly described and tied.

401.01.H. Uses Not Provided for Within Zoning Districts. Whenever in any zoning district a use is neither specifically allowed nor denied, the use shall be considered prohibited. In such cases, the City Council, on their own initiative or upon request, may conduct a study to determine if the use is acceptable and if so, what zoning district would be most appropriate and the determination as to conditions and standards relating to development of the use. The City Council or property owner, upon receipt of the staff study, shall if appropriate initiate an amendment to this Ordinance to provide for the particular use under consideration or shall find that the use is not compatible for development within the City.

401.01.I. Separability. It is hereby declared to be the intention of the City that the several provisions of this Ordinance are separable in accordance with the following:

1. If any court of competent jurisdiction shall adjudge any provisions of this Ordinance to be invalid, such judgment shall not affect any other provisions of this Ordinance not specifically included in said judgment.

2. If any court of competent jurisdiction shall adjudge invalid the application of any provision of this Ordinance to a particular property, building, or other structure, such judgment shall not affect the application of said provision to any other property, building, or structure not specifically included in said judgment.

401.01.J. Authority. This Ordinance is enacted pursuant to the authority granted by the Municipal Planning Act, Minnesota Statutes, Section 462.351 to 462.363.

401.01.K. Comprehensive Revision. The Council intends this Ordinance to be a comprehensive revision of Chapter 401 of the City Code, as amended. Except as otherwise provided herein, the provisions of this Ordinance are not intended to alter, diminish, or increase or otherwise modify any rights or liabilities.

401.02. RULES AND DEFINITIONS

401.02.A. Rules of Word Construction. For the purposes of this Ordinance, certain terms or words used herein shall be interpreted as follows:

1. The word "person" includes an owner or representative of the owner, firm, association, organization, partnership, trust, company or corporation as well as an individual.

2. The present tense includes the future tense; the singular includes the plural and the plural includes the singular.

3. The word "shall" is mandatory; the word "may" is permissive.

4. The singular number includes the plural, and the plural the singular.

5. All measured distances expressed in feet shall be to the nearest tenth of a foot.

6. When calculating parking stall requirements, any fraction of a number shall constitute an additional dwelling unit.

7. When calculating density, any fraction of a number shall not constitute an additional dwelling unit.

8. For terminology not defined in this Ordinance, the most current Webster's dictionary shall be used to define such terms.

401.02.B. Definitions. The following words and terms, wherever they occur in this Ordinance, shall be interpreted as herein defined:

Abutting: Making contact with or separated only by public right-of-way, railroad, public utility right-of-way or navigable waters.

Accessory Building or Use: A subordinate building or use which is located on the same lot on which the main building or use is situated and which is reasonable necessary and incidental to the conduct of the primary use of such building or main use.

Addition: Any physical enlargement of an existing structure.

Adjacent: In close proximity to or neighboring, not necessarily abutting.

Agricultural Uses: Those uses commonly associated with the growing of produce on farms. These include: field crop farming; pasture for hay; fruit growing; tree, plant, shrub, or flower nursery without building; truck gardening; roadside stand for sale in season of products grown on premises; and livestock raising and feeding, but not including fur farms, commercial animal feedlots, and kennels.

Alley: A public or private right-of-way primarily designed to serve as secondary access to the side or rear of those properties whose principal access is on a public street.

26 **Alternative Energy Systems Related/General Definitions:**

1. Accessory: For the purposes of this section, means a system designed as a secondary use to existing buildings or facilities, wherein the power generated is used primarily for on-site consumption.

2. Alternative energy system: A ground source heat pump, wind or solar energy system.

26 **Alternative Energy Systems Related/Solar:**

1. Building-integrated solar energy system: A solar energy system that is an integral part of a principal or accessory building, rather than a separate mechanical device, replacing or substituting for an architectural or structural component of the building including, but not limited to, photovoltaic or hot water solar systems contained within roofing materials, windows, skylights and awnings.

2. Flush-mounted solar energy system: A roof-mounted system mounted directly abutting the roof. The pitch of the solar collector may exceed the pitch of the roof up to five (5) percent but shall not be higher than ten (10) inches above the roof.

3. Passive solar energy system: A system that captures solar light or heat without transforming it to another form of energy or transferring the energy via a heat exchanger.

4. Photovoltaic system: A solar energy system that converts solar energy directly into electricity.

5. Solar energy system: A device or structural design feature, a substantial purpose of which is to provide daylight for interior lighting or provide for the collection, storage and distribution of solar energy for space heating or cooling, electricity generation or water heating.

26 **Alternative Energy Systems Related/Wind Energy:**

1. Horizontal axis wind turbine: A wind turbine design in which the rotor shaft is parallel to the ground and the blades are perpendicular to the ground.

2. Hub: The center of a wind generator rotor, which holds the blades in place and attaches to the shaft.

3. Hub height: The distance measured from natural grade to the center of the turbine hub.

4. Monopole tower: A tower constructed of tapered tubes that fit together symmetrically and are stacked one section on top of another and bolted to a concrete foundation without support cables.

5. Residential wind turbine: A wind turbine of ten (10) kilowatt (kW) nameplate generating capacity or less.

6. Small wind turbine: A wind turbine of one hundred (100) kilowatt (kW) nameplate generating capacity or less.

7. Total height: The highest point above natural grade reached by a rotor tip or any other part of a wind turbine.

8. Tower: A vertical structure that supports a wind turbine.

9. Utility wind turbine: A wind turbine of more than one hundred (100) kilowatt (kW) nameplate generating capacity.

10. Vertical axis wind turbine: A type of wind turbine where the main rotor shaft runs vertically.

11. Wind energy system: An electrical generating facility that consists of a wind turbine, feeder line(s), and associated controls and may include a tower.

12. Wind turbine: Any piece of electrical generating equipment that converts the kinetic energy of blowing wind into electrical energy through the use of airfoils or similar devices to capture the wind.

26 **Alternative Energy Systems Related/Ground Source Heat Pumps (Geothermal Heating):**

1. Closed loop ground source heat pump system: A system that circulates a heat transfer fluid, typically food-grade antifreeze, through pipes or coils buried beneath the land surface or anchored to the bottom in a body of water.

2. Ground source heat pump system: A system that uses the relatively constant temperature of the earth or a body of water to provide heating in the winter and cooling in the summer. System components include open or closed loops of pipe, coils or plates; a fluid that absorbs and transfers heat; and a heat pump unit that processes heat for use or disperses heat for cooling; and an air distribution system.

3. Heat transfer fluid: A non-toxic and food grade fluid such as potable water, aqueous solutions of propylene glycol not to exceed twenty (20) percent by weight or aqueous solutions of potassium acetate not to exceed twenty (20) percent by weight.

4. Horizontal ground source heat pump system: A closed loop ground source heat pump system where the loops or coils are installed horizontally in a trench or series of trenches no more than twenty (20) feet below the land surface.

5. Open loop ground source heat pump system: A system that uses groundwater as a heat transfer fluid by drawing groundwater from a well to a heat pump and then discharging the water over land, directly in a water body or into an injection well.

6. Vertical ground source heat pump system: A closed loop ground source heat pump system where the loops or coils are installed vertically in one or more borings below the land surface.

Animals:

1. Domestic Animals: For purposes of this Ordinance, domestic animal shall be defined as house pets such as dogs, cats, traditional and typical animal pets, and birds (not including pigeons, chickens, geese, turkeys or other domestic fowl) which can be contained within a principal structure throughout the entire year, provided that the containment can be accomplished without special modification to the structure requiring a building permit from the City. In addition, it includes rabbits normally sheltered outside the home.

2. Farm Animals: Cattle, hogs, bees, sheep, goats, chickens, turkeys, horses and other animals traditional and commonly accepted as farm animals in the State of Minnesota.

Antenna, Cellular Telephone: A device consisting of a metal, carbon fiber, or other electromagnetically conductive rods or elements, usually arranged in a circular array on a single supporting pole or other structure, and used for the transmission and reception of radio waves in wireless telephone communications.

Antenna, Public Utility Microwave: A parabolic dish or cornucopia shaped electromagnetically reflective or conductive element used for the transmission and/or reception of point to point UHF or VHF radio waves in wireless telephone communications, and including the supporting structure thereof.

Antenna, Radio and Television, Broadcast Transmitting: A wire, set of wires, metal or carbon fiber rod or other electromagnetic element used to transmit public or commercial broadcast radio or television programming, and including the support structure thereof.

Antenna, Radio and Television Receiving: A wire, set of wires, metal or carbon fiber element(s), other than satellite dish antennas, used to receive radio, television, or electromagnetic waves, and including the supporting structure thereof.

Antenna, Satellite Dish: A device incorporating a reflective surface that is solid, open mesh, or bar configured and is in the shape of a shallow dish, cone, horn, or cornucopia. Such device is used to transmit and/or receive radio or electromagnetic waves between terrestrially and/or orbitally based uses. This definition shall include, but not be limited to, what are commonly referred to as satellite earth stations, TVROs (television, receive only) and satellite microwave antennas.

Antenna, Short-Wave Radio Transmitting and receiving: A wire, set of wires or a device, consisting of a metal, carbon fiber, or other electromagnetically conductive element used for the transmission and reception of radio waves used for short-wave radio communications, and including the supporting structure thereof.

Antenna Support Structure: Any pole, telescoping mass, tower, tripod, or any other structure which supports a device used in the transmitting or receiving of radio frequency energy.

Apartment: A room or suite of rooms which is designed for, intended for, or occupied as a residence by a single family or an individual, and is equipped with cooking facilities. Includes dwelling unit and efficiency unit.

Apartment Building: Three (3) or more apartments grouped in one building, with each unit sharing a common area for ingress and egress.

Applicant: The owner, their agent or other person having legal control, ownership and/or interest in land which the provisions of this Ordinance are being considered for or reviewed.

Automobile Repair - Major: General repair, rebuilding or reconditioning engines, motor vehicles or trailers; collision service, including body, frame or fender straightening or repair; overall painting or paint job; vehicle steam cleaning.

Automobile Repair-Minor: Installation, including cellular telephones, audio systems, and minor repairs, upholstering, replacement of parts (tires, glass, etc.) and minor motor services to passenger automobiles and trucks not exceeding twelve thousand (12,000) pounds gross weight, but not including any operation specified under "Automobile Repair-Major".

Automobile Wrecking or Junk Yard: Any place where two (2) or more vehicles not in running condition and/or not licensed, or parts thereof, are stored in the open and are not being restored to operation or any land, building or structure used for wrecking or storing of such motor vehicles or parts thereof; and including any commercial salvaging and scavenging of any other goods, articles or merchandise.

Awning: A temporary hood or cover which projects from the wall of a building, and of a type which can be retracted, folded or collapsed against the face of a supporting building.

Basement: That portion of a building between floor and ceiling, which is partly below and partly above grade, but so located that the vertical distance from grade to the floor below is less than the vertical distance from grade to ceiling (see Story).

Bay: Cantilevered area of a room.

Bed and Breakfast Facility: A building other than a hotel, wherefore compensation, meals and lodging are provided to transient guests, but not including a building providing these services to more than ten (10) persons, and where at least one (1) meal and/or beverages are offered in connection with the provision of sleeping accommodations.

Block: A tract of land bounded by streets, or a combination of streets and public parks, cemeteries, railroad rights-of-way, shorelines, waterways, or boundary lines of the corporate limits of the City.

Boarder: One who receives regular meals and/or regular meals and lodging for pay.

Boarding (House) Home - Foster Children: A family dwelling where children out of their own homes are cared for.

Boarding House: A building other than a hotel where, for compensation and by prearrangement for definite periods, meals or lodging and meals are provided to five (5) or more persons, not of the principal family therein, pursuant to previous arrangements and not to anyone who may apply, but not including a building providing these services for more than ten (10) persons.

Boundary Lines: Any line indicating the bounds or limits of any tract or parcel of land; also a line separating the various use districts as shown on the City's Zoning Map.

Buffer: The use of land, topography, difference in elevation, space, fences or landscape plantings to screen or partially screen a use or property from the vision of another use or property.

Buildable Area: The space remaining on a lot after the minimum setback and open space requirements of this Ordinance have been met and excluding easements.

Building: Any structure built for the support, shelter or enclosure of persons, animals, chattel or movable property of any kind, and includes any structure.

Building Facade: That portion of any exterior elevation of a building extending from grade to the top of the parapet wall or eaves and including the entire width of the building elevation.

Building Height: The distance to be measured from the mean ground level to the top of a flat roof, to the mean distance of the highest gable on a pitched or hip roof, to the deck line of a mansard roof, to the uppermost point on all other roof types.

Building Line: A line parallel to the street right-of-way or the ordinary high water level at any story level of a building and representing the minimum distance which all or any part of the building is set back from said right-of-way.

Building Setback: The minimum horizontal distance between the building and the lot line.

Business: Any establishment, occupation, employment or enterprise where merchandise is manufactured, exhibited or sold, or where services are offered for compensation.

Carport: A canopy constructed of metal or other materials supported by posts either ornamental or solid and completely open on at least two (2) sides.

Cellar: That portion of a building between the floor and ceiling which is wholly or partly below grade and is so located that the vertical distance from grade to the floor below is equal to or greater than the vertical distance from grade to ceiling.

Cemetery: A site or property set apart for the burial or interment of the dead.

Channel: A natural or artificial depression of perceptible extent, with definite bed and banks to confine and conduct water either continuously or periodically.

Church: A building, together with its accessory buildings and uses, where persons regularly assemble for religious worship and which building, together with its accessory buildings and uses, is maintained and controlled by a religious body organized to sustain public worship and activities.

City Council: The governing body for the City of Oak Park Heights.

Clear Cutting: The removal of an entire stand of trees and/or vegetation.

Club or Lodge: A non-profit association of persons who are bona fide members paying annual dues, use of premises being restricted to members and their guests.

Cluster Development: The development patterns and technique whereby structures are arranged in closely related groups to make the most efficient use of the natural amenities of the land as accomplished through a planned unit development.

Commercial Recreation: Bowling alley, cart track, jump center, golf, pool hall, vehicle racing or amusement dance hall, skating, trampoline, tavern, theater, firearms range, boat rental, amusement rides, campgrounds, deer park, and similar uses.

Comprehensive Plan: A comprehensive plan prepared after public participation and approved by the City, including a compilation of policy statements, goals, standards, fiscal guidelines, and maps indicating the general locations recommended for the various functional classes of land use, places and structures, and for the general physical development of the City, including any unit or part of such plan separately adopted and any amendment to such plan or parts thereof.

Concept Plan: A report in map and text form submitted as the first phase of a Planned Unit Development (PUD) proposal, depicting the location, general purpose, general type of land use and circulation patterns, primary relationships between site elements and between the proposed development and surrounding development, proposed general schedule of development, and information on the applicant.

Conditional Use: Those occupations, vocations, skills, arts, businesses, professions, or uses and/or related building/ structures, or improvements specifically designated in each zoning use district or by this Ordinance, which for the respective conduct or performance may require reasonable, but special, peculiar, unusual or extraordinary limitations facilities, plans, structures, conditions, modification, or regulations for the promotion or preservation of the general public welfare, health, convenience and the integrity of the City Comprehensive Plan and this Ordinance.

Conditional Use Permit: A permit issued by the Council in accordance with procedures specified in this Ordinance, as a flexibility device to enable the Council to assign dimensions to a proposed use or development or conditions surrounding it after consideration of adjacent uses and their functions and the special problems which the proposed use presents.

Condominium: A multiple dwelling containing individually owned dwelling units and jointly owned and shared areas and facilities, which dwelling or development is subject to the provisions of the Minnesota Condominium Law, Minnesota Statutes, Section 515.A.1-101 to 515.A.4-118.

Convenience (Fast) Food Establishment: An establishment which serves food in or on disposable or edible containers in individual servings for consumption on or off the premises.

Cooperative (Housing): A multiple family dwelling owned and maintained by the residents and subject to the provisions of MS 290.09 and 290.13. The entire structure and/or real property is under common ownership as contrasted to a condominium dwelling where individual units are under separate individual occupancy ownership.

Court: An unoccupied open space other than a yard which is bounded on two (2) or more sides by the walls of the buildings.

Curb Level: The elevation of the established curb in front of a building measured at the center of such front. Where no curb level has been established, the City Engineer shall determine a curb level or its equivalent for the purpose of this Ordinance.

Day Care Facility: Any facility licensed by the State Department of Public Welfare, public or private, which for gain or otherwise regularly provides one or more persons with care, training, supervision, habilitation, rehabilitation or developmental guidance on a regular basis, for periods of less than twenty-four (24) hours per day, in a place other than the person's own home. Day care facilities include but are not limited to: family day care homes, group family day care homes, day care centers, day nurseries, nursery schools, day-time activity centers, day treatment programs and day services, as defined by Minnesota State Statutes, Section 245.782.5.

Deck: A horizontal, unenclosed platform with or without attached railings, seats, trellises, or other features, attached or functionally related to a principal use or site.

Density, Residential: A number expressing the relationship of the number of dwellings to an acre of land as established in the Comprehensive Plan.

Department Store: A business which is conducted under a single owner's name wherein a variety of unrelated merchandise and services are housed enclosed and are exhibited and sold directly to the customer for whom the goods and services are furnished.

Deposition: Any rock, soil, gravel, sand or other material deposited naturally or by man into a water body, watercourse, floodplains or wetlands.

District: A section or sections of the City for which the regulations and provisions governing the use of buildings and lands are uniform for each class of use permitted therein.

Diversion: A channel that intercepts surface water runoff and that changes the accustomed course of all or part of a stream.

Drainage: The removal of surface water or ground water from land.

Dredging: To enlarge or clean-out a water body, watercourse, or wetland.

Drive-in Establishment: An establishment which accommodates the patron's automobile from which the occupants may receive a service or in which products purchased from the establishment may be consumed.

Dwelling: A building or portion thereof, designated exclusively for residential occupancy, including one-family, two-family, and multiple family dwellings, but not including hotels, motels, boarding houses, or manufactured housing.

Dwelling, Multiple (Apartment): A building designed with three (3) or more dwelling units exclusively for occupancy by three (3) or more families living independently of each other, but sharing hallways and main entrances and exits. A two-family dwelling (duplex) with a separate rooming unit(s) shall be considered and classified as a multiple family dwelling.

Dwelling, Single-Family: A dwelling unit designed exclusively for occupancy by one (1) family.

1. Attached: A dwelling which is joined to another at one or more sides by a party wall.

2. Detached: A dwelling unit not attached to another dwelling or structure or is entirely surrounding by open space.

Dwelling, Two-Family: A residence designed for or occupied by two (2) families only, with separate housekeeping and cooking facilities for each. A two-family dwelling (duplex) with a separate rooming unit(s) shall be considered and classified as a multi-family dwelling.

1. Double Bungalow: A two-family dwelling with two (2) units, side-by-side.

2. Duplex: A two-family dwelling unit with one (1) unit above the other.

Dwelling Unit: A residential building or portion thereof intended for occupancy by one (1) or more persons with facilities for living, sleeping, cooking and eating, but not including hotels, motels, nursing homes, seasonal cabins, boarding or rooming houses, resorts, tourist homes, or trailers.

Dwelling Unit Occupancy: Occupancy of a dwelling unit for the purpose of enforcing provisions of this Ordinance shall be limited by restrictions as included in the definition of family in this Section.

Dwelling Unit, Temporary: A residence allowed for a specific time which is intended for occupancy by one (1) or more persons with facilities for living, sleeping, cooking and eating. Temporary dwelling units shall not include garages, tents, or accessory buildings.

Earth Berm (House Construction): An earth covering on the above grade portions of the building walls.

Earth Sheltered Building: A building so constructed that fifty (50) percent or more of the completed structure is covered with earth. Earth covering is measured from the lowest level of the livable space in residential units and of usable space in non-residential buildings. An earth sheltered building is a complete structure that does not serve just as a foundation or sub-structure for above grade construction. A partially completed building shall not be considered earth sheltered.

Easement: A grant by an owner of land for a specific use by persons other than the owner.

Efficiency Apartment (Dwelling Unit): A one (1) room dwelling unit consisting of one (1) principal room having cooking facilities and used for combined living, dining and sleeping purposes.

Elderly (Senior Citizen) Housing: A public agency owned or controlled multiple dwelling building with open occupancy limited to persons over sixty-two (62) years of age.

Engineer: The registered engineer employed or retained by the City, unless otherwise stated.

Erosion: The wearing away of land surface by the action of natural elements.

Essential Service: The erection, construction, alteration or maintenance by public utilities or Municipal departments of underground or overhead telephone, gas, electrical, steam, hot water, communication or water transmission, distribution, collection, supply or disposal systems, including poles, wires, mains, drains, sewers, pipes, conduits, cables, fire alarm boxes, police call boxes, traffic signals, hydrants and other similar equipment and accessories in connection therewith for the furnishing of adequate service by such private or public utilities or Municipal departments. Transmission reception antennas shall not be considered an essential service.

Essential Service Structures: Structures and buildings necessary for the operation of essential services, including but not limited to: telephone buildings, telephone booths, gas regulator stations, substations, electrical stations, water tanks, lift stations.

Exterior Storage: The storage of goods, materials, equipment, manufactured products and similar items not fully enclosed by a building.

Extractive Use: The use of land for surface or subsurface removal of sand, gravel, rock, industrial minerals, other nonmetallic minerals, and peat not regulated under Minnesota Statutes, Sections 93.44 to 93.51.

38 **Family:** An individual or two (2) or more persons related by blood, marriage, adoption or a group of not more than three (3) persons who need not be related by blood or marriage living together in a dwelling unit except for transient guests being accommodated in a bed and breakfast or transient lodging facility. (The number of persons herein defined are the basis upon which performance standards are established within this Ordinance.)

Farm: An unplatted tract of land having one quarter-quarter section containing approximately ten (10) acres or more, or two or more abutting parcels under the same ownership having an area of ten (10) acres, measured from the centerline of abutting roads, usually with a house and barn and other buildings, and on which crops and often livestock are raised as a major source of livelihood.

Farm - Hobby: A platted or unplatted tract of land generally consisting of ten (10) or less acres in size with a house and accessory buildings on which crops and often livestock are raised but not as a principal or major source of income. A hobby farm shall not qualify for exemptions provided in this Ordinance for farms.

Farming: The process of operating a farm for the growing and harvesting of crops which shall include those necessary buildings, related to operating the farm, and the keeping of common domestic farm animals.

Farmstead: A dwelling unit surrounded by or connected to a farming operation, all under single ownership.

Fence: A fence is defined for the purpose of this Ordinance as any partition, structure, wall or gate erected as a dividing marker, barrier or enclosure and located along the boundary within the required yard.

1. Fence, Boundary Line: All fences located within five (5) feet of a property line.

2. Fence, Interior Yard: All fences located five (5) feet from a property line.

35, 41 3. Fence, Height: The height of a fence is measured from the highest projection of a fence structure or support post to the adjacent finished grade.

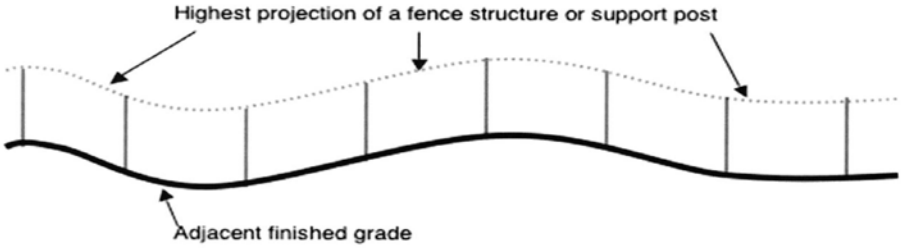

Filling: The act of depositing any rock, soil, gravel, sand or other material so as to fill natural topography, a water body, watercourse, or wetland.

Flood Related:

1. Equal Degree of Encroachment: Method of determining the location of encroachment lines so that the hydraulic capacity of floodplain lands on each side of a stream are reduced by an equal amount when calculating the increases in flood stages due to floodplain encroachments.

2. FEMA: Federal Emergency Management Agency.

3. Flood: A temporary rise in stream flow or stage that results in inundation of the areas adjacent to the channel.

4. Flood Frequency: The average frequency, statistically determined, for which it is expected that a specific flood stage or discharge may be equaled or exceeded.

5. Flood Fringe: That portion of the floodplain outside of the floodway. Flood fringe is synonymous with the term "floodway fringe" used in the Flood Insurance Study for the City.

6. Flood Hazard Areas: The areas included in the floodway and flood fringe as indicated on the official Zoning Map and the Flood Insurance Study and Flood Insurance Rate Map which have been officially adopted by the City.

7. Flood Insurance Rate Map: The Flood Insurance Rate Map prepared by the Federal Emergency Management Agency for the City.

8. Flood Insurance Study: The Flood Insurance Study prepared for the City by the Federal Emergency Management Agency.

9. Floodplain: The areas adjoining a watercourse which has been or hereafter may be covered by the 100-year flood as determined by the use of the 100-year flood profile and other supporting technical data in the Flood Insurance Study.

10. Floodproofing: A combination of structural provisions, changes or adjustments to properties and structures subject to flooding primarily for the reduction or elimination of flood damages to properties, water and sanitary facilities, structures and contents of buildings in a flood hazard area in accordance with the Minnesota State Building Code.

11. Floodway: The channel of the watercourse and those portions of the adjoining floodplains which are reasonably required to carry and discharge the regional flood determined by the use of the 100-year flood profile and other supporting technical data in the Flood Insurance Study.

12. Obstruction: Any dam, wall, wharf, embankment, levee, dike, pile, abutment, projection, excavation, channel rectification, culvert, building, wire, fence, stockpile, refuse, fill, structure or matter in, along, across or projecting into any channel, watercourse or regulatory flood hazard area which may impede, retard or change the direction of the flow of water, either in itself or by catching or collecting debris carried by such water, or that is placed where the flow of water, either in itself or by catching or collecting debris carried by such water, or that is placed where the flow of water might carry the same downstream to the damage of life or property.

13. 100-Year Flood: A flood which is representative of large regional floods known to have occurred generally in Minnesota and reasonably characteristic of what can be expected to occur on an average frequency in the magnitude of the 100-year recurrence interval as determined by the use of the 100-year flood profile and other supporting technical data in the Flood Insurance Study.

14. Reach: A hydraulic engineering term to describe a longitudinal segment of a stream or river influenced by the natural or man-made obstruction. In an urban area, the segment of a stream or river between two (2) consecutive bridge crossings would most typically constitute a reach.

15. Regulatory Flood Protection Elevation: A point not less than one (1) foot above the water surface profile associated with the 100-year flood as determined by the use of the 100-year flood profile and supporting technical data in the Flood Insurance Study plus any increase in flood heights attributable to encroachments on the floodplain. It is the elevation to which uses regulated by this Section are required to be elevated or flood-proofed.

Floor Area, Gross: The sum of the gross horizontal areas of all floors of the building or portion thereof devoted to a particular use, including accessory storage areas located within selling or working space such as activities, to the production or processing of goods, or to business or professional offices. However, the floor area shall not include: basement or cellar floor area other than area devoted to retailing activities, the production or processing of goods, or to business or professional offices. The floor area of a residence shall not include the cellar area.

Frontage: That boundary of a lot which abuts an existing or dedicated public street, watercourse or similar barrier.

Garage, Private: An accessory building or accessory portion of the principal building which is intended for and used to store the private passenger vehicles and non-commercial trucks not exceeding twelve thousand (12,000) pounds gross weight, of the family or families resident upon the premises, and in which no business service or industry is carried on unless specifically authorized by this Ordinance.

Garage, Public: Any garage other than a private garage. May also mean parking ramp.

Gas Station: See Motor Fuel Station.

Governing Body: The Oak Park Heights City Council.

Grade (Adjacent Ground Elevation): The lowest point of elevation of the finished surface of the ground, paving or sidewalk within the area between the building and the property line, or when the property line is more than five (5) feet from the building, between the building and line five (5) feet from the building.

Grading: Changing the natural or existing topography of the land.

Guest Room: A room occupied by one (1) or more guests for compensation and in which no provision is made for cooking, but not including rooms in a dormitory for sleeping purposes primarily.

Halfway House: See Residential Facility.

Health Club: A facility which provides athletic activities such as tennis, handball, racquetball, track, basketball, exercise devices, etc. and such incidental services as whirlpool, sauna or massage service for members and guests.

Home Occupation: Any occupation or profession engaged in by the occupant of a residential dwelling unit, which is clearly incidental and secondary to the residential use of the premises and does not change the character of said premises.

Hotel: Any building or portion thereof occupied as the more or less temporary abiding place of individuals and containing six (6) or more guest rooms, used, designated, or intended to be used, let or hired out to be occupied, or which are occupied by six (6) or more individuals for compensation, whether the compensation be paid directly or indirectly.

Housing Shelter-Temporary Housing: A facility operated by the public or a non-profit charitable group or institution which provides one or more transient/homeless persons with lodging and meals for short periods of time in a place other than a persons own home.

Interim Use: A temporary use of property until a particular date, until the occurrence of a particular event, or until zoning regulations no longer allow it.

Junk Yard: An open area where waste, used, or second hand materials are bought, sold, exchanged, stored, baled, packed, disassembled or handled; including but not limited to, scrap iron and other materials, paper rags, rubber, tires, lumber, and bottles. A junk yard includes an auto wrecking yard, but does not include uses established entirely within closed buildings nor sanitary land fills.

Kennel: Any lot, premises, dwelling or dwelling unit in which three (3) or more dogs over the age of six months are kept, harbored, owned or otherwise possessed, either on a commercial basis or scale for boarding or breeding, or on a private basis for personal use, enjoyment or profit.

Landscaping: Plantings such as trees, flowers, grass and shrubs and improvements directly related thereto.

Land Reclamation: The process of the re-establishment of acceptable topography (i.e. slopes), vegetative cover, soil stability and the establishment of safe conditions appropriate to the subsequent use of the land.

1 **Lighting Related:**

1. Cutoff: The point at which all light rays emitted by a lamp, light source or luminaire are completely eliminated at a specific angle above the ground.

2. Cutoff Angle: The angle formed by a line drawn from the direction of light rays at the light source and a line perpendicular to the ground from the light source above which no light is emitted (see Figure 1).

Figure 1. Cut Off Angle

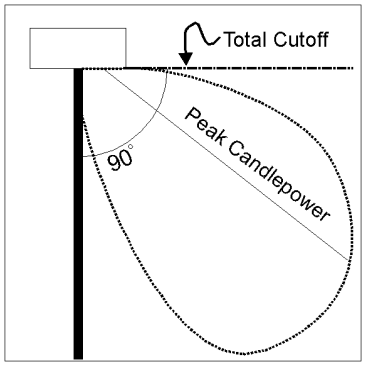

3. Cutoff Type Luminaire: A luminaire with elements such as shields, reflectors, or refractor panels which direct and cut off the light at a cutoff angle that is less than ninety (90) degrees.

4. Flashing Light: A light source which is not constant in intensity or color at all times while in use.

5. Foot candle: A unit of illumination produced on a surface, all points of which are one (1) foot from a uniform point source of one (1) candle.

6. Light Source: A single artificial point source of luminescence that emits measurable radiant energy in or near the visible spectrum.

7. Luminaire: A complete lighting unit consisting of a light source and all necessary mechanical, electrical and decorative parts.

8. Outdoor Lighting: Any light source or collection of light sources, located outside a building, including but not limited to, light sources attached to any part of a structure, located on the surface of the ground or located on freestanding poles.

9. Outdoor Light Fixture: Outdoor electrically powered illuminating devices, outdoor lighting or reflective surfaces, lamps and similar devices, permanently installed or portable, used for illumination or advertisement. The fixture includes the hardware that houses the illumination source and to which the illumination source is attached including, but not limited to, the hardware casing. Such devices shall include, but are not limited to, search, spot, and flood lights for:

   a. Buildings and structures.
   b. Recreational areas.
   c. Parking lot lighting.
   d. Landscaping lighting.
   e. Signs.
   f. Street lighting.
   g. Product display area lighting.
   h. Building overhangs and open canopies.

10. Security Lighting: Outdoor lighting fixtures installed exclusively as a measure to reduce the possible occurrence of a crime on the property.

11. Shielding: A technique or method of construction permanently covering the top and sides of a light source by a material which restricts the light emitted to be projected below and imaginary horizontal plane passing through the light fixture (see Figure 2).

Figure 2 - Shielding

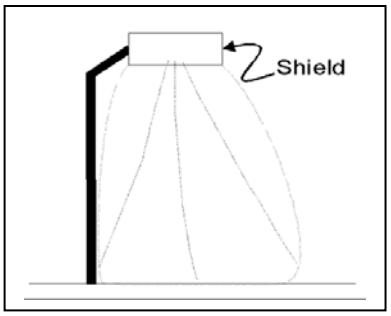

12. Spillage: Any reflection, glare or other artificial light that emits onto any adjoining property or right-of-way and is above a defined maximum illumination.

Loading Space: A space or berth on the same lot with a building, or contiguous to a group of buildings, for the temporary parking of a commercial vehicle while loading or unloading merchandise or materials and which abuts upon a street, alley or other appropriate means of access.

Lodging House: A building other than a hotel, where for compensation for definite periods, lodging is provided for three (3) or more persons not of the principal family, but not including a building providing this service for more than ten (10) persons.

Lodging Room: A room rented as sleeping and living quarters, but without cooking facilities and with or without an individual bathroom. In a suite of rooms without cooking facilities, each room which provides sleeping accommodation shall be counted as one (1) lodging room.

Lot (of Record): A parcel of land, whether subdivided or otherwise legally described, as of the effective date of this Ordinance, or approved by the City as a lot subsequent to such date and which is occupied by or intended for occupancy by one (1) principal building, or principal use together with any accessory buildings and such open spaces as required by this Ordinance and having its principal frontage on a street, or a proposed street approved by the Council.

Lot: A parcel or portion of land of at least sufficient size to meet minimum zoning requirements for use, coverage and area, and to provide such yards and other open spaces as are herein required. Such lot shall have frontage on an improved public street.

Lot Area: The total land area of a horizontal plane within the lot lines.

Lot Area, Minimum (**Lots of Record and Preliminary Platted Lots Having Legal Standing Established on or Before December 4, 1996)**: Except as may be otherwise required by this Ordinance, the area of a horizontal plane within the lot lines.

Lot Area, Minimum (Lots of Record Established After December 4, 1996): Except as may be otherwise expressly allowed in this Ordinance, the area of a horizontal plane within the lot lines excluding major drainageways, wetlands, water bodies, road rights-of-way, and required buffer strips.

Lot Area Per Unit: The lot area required by this Ordinance to be provided for each family in a dwelling unit.

Lot, Auditors: A lot termed an Auditors Lot on any plat shall be defined the same as "lot" for purposes of this Ordinance.

Lot, Base: Lots meeting all specifications in the zoning district prior to being subdivided into a two-family dwelling or quadraminium subdivision.

Lot, Corner: A lot situated at the junction of and abutting on two (2) or more intersecting streets; or a lot at the point of deflection in alignment of a single street, the interior angle of which is one hundred thirty-five (135) degrees or less.

Lot Depth: The distance between the midpoints of straight lines connecting the foremost points of the side lot lines in front and the rear most points of the side lot lines in the rear.

Lot, Double Frontage: An interior lot having frontage on two (2) streets.

Lot, Front: The front of a lot shall be, for purposes of complying with this Ordinance, that boundary abutting a public right-of-way having the least width.

Lot Improvement: Any building, structure, place, work of art, or other object, or improvement of the land on which they are situated constituting a physical betterment of real property, or any part of such betterment.

Lot, Interior: A lot, other than a corner lot, including through lots.

Lot Line: A property boundary line of any lot held in single or separate ownership; except that where any portion of the lot extends into the abutting street or alley, the lot line shall be deemed to be the street or alley right-of-way.

Lot Line, Rear: That boundary of a lot which is opposite the front lot line. If the rear lot line is less than ten (10) feet in length, or if the lot forms a point at the rear, the rear lot line shall be a line ten (10) feet in length within the lot, parallel to and at the maximum distance from the front lot line.

Lot, Reversed Frontage: A lot in which the frontage is at right angles, or approximately right angles, to the general pattern in the area involved. A reversed frontage lot may be a corner lot or an interior lot.

Lot, Substandard: A lot or parcel of land for which a deed has been recorded in the Office of the Washington County Recorder upon or prior to the effective date of this Ordinance which does not meet the minimum lot area, structure setbacks or other dimensional standards of this Ordinance.

Lot, Through: A lot fronting on two parallel streets.

Lot, Unit: Lots created from the subdivisions of a two-family dwelling or quadraminium having different minimum lot size requirements than the conventional base lots within the zoning district.

Lot, Width: The shortest horizontal distance between the side lot lines measured at right angles to the lot depth at the minimum required building setback line. If no setback line is established, the distance between the side lot lines measured along the public right-of-way.

Mail Order Business: A business that is primarily organized to promote, receive and fill requests for merchandise or services through the mail.

Manor Home: A residential structure with five (5) to eight (8) units with each unit having a separate entrance/exit. There may be more than one (1) floor and an attached garage space.

Manufactured Building: A manufactured building (or prefabricated structure) is any structure manufactured in accordance with the requirements of the Minnesota Prefabricated Structures and Manufactured Building Code promulgated in accordance with Minnesota Statutes Section 16.852 and 16B.61 (State Building Code).

Manufactured Home: A structure not affixed to or part of real estate, transportable in one or more sections, which in the traveling mode, is eight (8) body feet or more in width or forty (40) body feet or more in length, or when erected on site, is three hundred twenty (320) or more square feet, and which is built on a permanent chassis and is designed to be used as a dwelling with or without a permanent foundation when connected to the required utilities, and includes the plumbing, heating, air conditioning and electrical systems contained therein, except that the term includes any structure which meets all the requirements and with respect to which the manufacturer voluntarily filed a certification required by the Secretary of the United States Department of Housing and Urban Development and complies with the standards established under this Section. In Floodway and Flood Fringe Overlay Districts, a manufactured home means a structure, transportable in one or more sections, which is built on a permanent chassis and is designed for use with or without a permanent foundation when connected to the required utilities. Furthermore, in Floodway and Flood Fringe Overlay Districts for floodplain management purposes, the term manufactured home also includes park trailers, travel trailers and other similar vehicles placed on a site for greater than one hundred eighty (180) consecutive days.

Manufactured Home Lot: A section of ground in a manufactured home park designated as the location of one housing unit, and all other necessary improvements required by this Section.

Manufactured Home Park: Any park, court, lot, parcel or tract of land, designed, improved, maintained or intended for the purpose of supplying a location for manufactured home units or upon which any manufactured homes are parked. It shall include all buildings used or intended for use as part of the equipment thereof, whether a charge is made for the use of the manufactured home park or not.

Marquee: See Canopy.

Medical and Dental Clinics: A structure intended for providing medical and dental examinations and service available to the public. This service is provided without overnight care available.

Metes and Bounds Description: A description of real property which is not described by reference to a lot or block shown on a map, but is described by starting at a known point and describing the bearings and distances of the lines forming the boundaries of the property or delineating a fractional portion of a section, lot or area by described lines or portions thereof.

40 **Micro Wireless Facility:** Micro wireless facility means a small wireless facility that is no longer than twenty-four (24) inches long, fifteen (15) inches wide, and twelve (12) inches high, and whose exterior antenna, if any, is no longer than eleven (11) inches.

Minerals: Soil, clay, stone, sand and gravel and other similar solid material or substance to be mined from natural deposits.

Mining: All or part of the process involved in the extraction of minerals by removing the overburden and extracting directly from the mineral deposits thereby exposed.

Mobile Home Subdivision: A subdivision containing a minimum of ten (10) lots, allowing both conventional homes and mobile homes. Existing subdivisions containing a minimum of thirty (30) percent mobile homes shall be defined as mobile home subdivisions.

Model Home: A home which is similar to others in a development and which is open to public inspection for the purpose of selling said other homes.

Motel/Motor Hotel: A building or group of detached, semi-detached buildings containing guest rooms or units, each of which has a separate entrance directly from the outside of the building, or corridor, with garage or parking space conveniently located to each unit, and which is designed, used or intended to be used primarily for the accommodation of transient guests traveling by automobile.

Motor Freight Terminal (Truck Terminal): A building in which freight brought by motor truck is assembled and stored for routing in intra-state or interstate shipment by motor truck.

Motor Fuel Station: A place where gasoline is stored only in underground tanks, kerosene or motor oil and lubricants or grease, for operation of automobiles, are retailed directly to the public on premises, and including minor accessories and services for automobiles, but not including automobile major repairs and rebuilding.

Name Plate: A sign indicating the name and address of a building or the name of an occupant thereof and the practice of a permitted occupation therein.

Natural Drainage System: All land surface areas which by nature of their contour configuration, collect, store and channel surface water runoff.

Natural Obstruction: Means any rock, tree, gravel or analogous natural matter that is an obstruction and has been located within a water body, watercourse, or wetland by a non-human cause.

Non-Conforming Structure, Use or Lot - Illegal: A lot, building, structure, premise, lot, or use unlawfully established and in violation of regulations applicable at the time of development or initiation.

Non-Conforming Structure, Use or Lot - Legal: A lot, building, structure, premise, or use lawfully established prior to the adoption of this Ordinance or any amendment thereto which does not now conform with the applicable conditions or provisions of this Ordinance for the district in which the structure or use is located.

Noxious Matter: Any solid, liquid, or gaseous material including but not limited to gases, vapors, odor, dusts, mists, or combinations thereof, the emission of which is detrimental to or endangers the public health, safety, comfort or general welfare or causes damage to property.

Nursery, Landscape: A business growing and selling trees, flowering and decorative plants, and shrubs.

Nursing Home A private building with facilities for the care of children, the aged, or the infirm, or a place of rest for those suffering bodily disorders, but not containing equipment for surgical care or for treatment of disease or injury. The nursing home shall be licensed by the State Board of Health as provided for in Minnesota State Statutes.

Occupancy: The purpose for which a building is used or intended to be used. The term shall also include the building or room housing such use. Change of occupancy is not intended to include change of tenants or proprietors.

Off-Street Loading Space: A space accessible from the street, alley or way, in a building or on a lot, for the use of trucks while loading or unloading merchandise or materials. Such space shall be of such size as to accommodate one (1) truck of the type typically used in the particular business.

Off-Street Parking Space: An area of such shape and dimensions as provided by this Ordinance, enclosed in the principal building, in an accessory building, or unenclosed, sufficient in size to store one (1) motor vehicle, which has adequate access to a public street or alley, and permitting satisfactory ingress and egress of an automobile.

Open Sales, Lot: Any open land used or occupied for the purpose of buying, selling and/or renting merchandise and for the storing of same prior to sale.

Open Space: Any open area not covered by structures, but not limited to the following uses: required or established yard areas, parking areas, sidewalks, school walks, trails, recreation areas, water bodies, shorelands, watercourses, wetlands, groundwater recharge areas, floodplain, floodway, flood fringe, erodible slopes, woodland, and soils with severe limitation for development.

Open Storage: Storage of material outside of a building.

Out-Patient Care: Medical examination or service available to the public. This service is provided without overnight care and shall be considered a separate, independent, principal use when combined or operated in conjunction with a hospital.

Overburden: The earth, rock and other materials that lie above a natural deposit of mineral.

Outlot: A lot remnant or parcel of land left over after platting, which is intended as open space or other future use, for which no building permit shall be issued.

Owner: An individual, association, syndicate, partnership, corporation, trust or any other legal entity holding an equitable or legal ownership interest in land, buildings, structures, dwelling unit(s) or other property.

Parapet: A low wall which is located on a roof of a building will be known as a parapet for this Ordinance.

Parcel: An individual lot or tract of land.

Parking Space: An area, enclosed in the main building, in an accessory building, or unenclosed, sufficient in size to store one (1) automobile, which has adequate access to a public street or alley and permitting satisfactory ingress and egress of an automobile.

Party Wall: A common wall which divides two (2) independent structures by a fire wall.

Performance Standard: Criterion established for setbacks, fencing, landscaping, screening, drainage, accessory buildings, outside storage and to control noise, odor, toxic or noxious matter, vibration, fire and explosive hazards, or glare or heat or other nuisance elements generated by or inherent in uses of land or buildings.

Permitted Use: A use which may be lawfully established in a particular district or districts, provided it conforms with all requirements, regulations, and performance standards (if any) of such districts and this Ordinance.

Person: An individual, firm, partnership, association, corporation, or organization of any kind.

Planned Unit Development:

1. As a conditional use permit, a development procedure whereby internal site design standard deviations from this Section may be allowed in order to accommodate two (2) or more principal structures, and/or facilities improved site design and operation.

2. As a zoning district, a development procedure whereby a mixing of buildings and uses can occur which cannot be otherwise addressed under this Section, and/or whereby internal site design standard deviations from this Section may be allowed to improve site design and operation.

Planning Commission: The Oak Park Heights Planning Commission.

Pole Buildings: Any structure possessing the following characteristics: structural wood poles or timbers buried in ground on individual footings; metal wall coverings hung vertically of less than twenty-eight (28) gauge. Such definition shall not include or apply to decks, sign supports, earth retention structures, playground equipment, electric utilities, or any similar structure not covering or enclosing a specific area.

Prefabricated Home: See Manufactured Home.

Prefabricated Structure: See Manufactured Building.

Premises: A lot or plot with the required front, side and rear yards for a dwelling or other use as allowed under this Ordinance.

Principal Structure (Building): A structure that contains a principal use as contrasted to an accessory or incidental use of the property.

Principal Use: The main use of land or buildings as distinguished from subordinate or accessory uses. A "principal use" may be either permitted or conditional.

Processing Facility: A building or enclosed space used for the collection and processing of recyclable materials. Processing does not include end-use manufacturing or industrial use but may include the preparation of material for efficient shipment or end-user's specifications, by such means as baling, briquetting, compacting, flattening, grinding, crushing, mechanical sorting, shredding, cleaning, and remanufacturing.

1. A light processing facility occupies an area of under 45,000 square feet of gross collection, processing and storage area and has up to an average of two (2) outbound truck shipments per day. Light processing facilities are

limited to baling, briquetting, crushing, compacting, grinding, shredding and sorting of source-separated recyclable materials and repairing of reusable materials. A light processing facility shall not shred, compact, or bale ferrous metals other than food and beverage containers.

2. A heavy processing facility is any processing facility other than a light processing facility and may shred, compact, or bale ferrous metals other than food and beverage containers.

Protective Covenants: Contracts entered into between all owners and holders of mortgage constituting a restriction on the use of property within a subdivision for the benefit of the property owners, and providing mutual protection against undesirable aspects of property value and economic integrity of any given area.

Public Entrance: Any passage or opening which affords entry and access to the general public or customer.

Public Entrance, Common: A public entrance providing access for the utilization and benefit of two or more tenants or building occupants.

Public Entrance, Exclusive: A public entrance under the exclusive control and providing access to one tenant or building occupant.

Public Uses: Uses owned or operated by municipal, school districts, county, state, or other governmental units.

Public Utility: Any person, firm, corporation, municipal department or board fully authorized and furnishing under municipal regulation to the public electricity, gas, steam, communication services, telegraph services, transportation, water or the like.

Publication: Notice placed in the official City newspaper stating time, location and date of meeting and description of the topic.

Quadraminium: A single structure which contain four (4) dwelling units, all of which have individually separate entrances from the exterior of the structure.

Railroad Right-of-Way: A strip of land with railway tracks and auxiliary facilities for track operation.

Recreation, Field or Building: An area of land, water, or any building in which amusement, recreation or athletic sports are provided for public or semi-public use, whether temporary or permanent, except a theater, whether provision is made for the accommodation of an assembly or not. A golf course, arena, baseball park, stadium, circus or gymnasium is a recreation field or building for the purpose of this Section.

Recreational Vehicle: Includes manufactured homes less than thirty-five (35) feet in overall length, including those with telescope or fold down, chassis, mounted campers, house cars, motor homes, tent trailers, slip-in-campers (those mounted in a pickup truck or similar vehicle), converted buses, and converted vans used primarily for recreational purposes. Cars used for racing shall not be included within this definition.

Recyclable Materials: Materials that are separated from mixed municipal solid waste for the purpose of recycling, including paper, glass, metals, automobile oil, batteries and other specifically allowed items. Refuse derived material or other material that is destroyed by incineration is not a recyclable material.

Recycling Facility: A center for the collection, processing or repair of recyclable materials for reuse in their original form or use in manufacturing processes. Recycling facilities may include the following:

1. Designated Recycling Center: A recycling facility which has complied with the permitting rules of the Pollution Control Agency and is open a minimum of twelve (12) operating hours each week, twelve (12) months per year, and accepts for recycling at least four different materials such as paper, glass, plastic, and metal.

2. Collection Facility: A place where the public may donate, redeem, or purchase, recyclable materials. Collection facilities may include vending machines, mobile units, unattended containers placed for the donation of recyclable materials and permanent structures.

    a. Reverse Vending Machines: A reverse vending machine is an automated mechanical device which accepts at least one or more types of empty beverage containers including, but not limited to, aluminum cans, glass and plastic bottles, and issues a cash refund or a redeemable credit slip. A reverse vending machine may sort and process containers mechanically provided that the entire process is enclosed within the machine.

    b. Mobile Recycling Unit: A mobile recycling unit means an automobile, truck, trailer or van which is used for the collection of recyclable materials. A mobile recycling unit also means the bins, boxes or containers transported by trucks, vans, or trailers, used for the collection of recyclable materials.

Residential Care Facility: Any facility licensed by the State Department of Health or Department of Public Welfare, public or private, which for gain or otherwise regularly provides one or more persons with twenty-four (24) hour per day substitute for care, food, lodging, training, education, supervision, habilitation, rehabilitation and treatment they need, but which for any reason cannot be furnished in the person's own home. Residential facilities include but are not limited to: State

institutions under the control of the Commissioner of Public Welfare, foster homes, halfway houses, residential treatment centers, maternity shelters, group homes, residential programs or schools for handicapped children.

Restaurant: An establishment which serves food in or on non-disposable dishes to be consumed primarily while seated at tables or booths within the building.

Retail: The sale of items in small quantities directly to the consumer.

Roof Line: The top of the coping; or, when the building has a pitched roof, at the intersection of the outside wall with the roof.

Satellite Dish Height: The height of the antenna or dish measured vertically from the highest point of the antenna or dish when positioned for operation, to the top of the foundation which supports the antenna.

School: A building used for the purpose of elementary or secondary education, which meets all the requirements of compulsory education laws of the State of Minnesota, and not providing residential accommodations.

Semi-Public Use: Uses owned by private or private non-profit organizations which are open to some, but not all, of the public, such as denominational cemeteries, private schools, clubs, lodges, recreation facilities, churches, etc.

Septic Sewer System: A septic sewer disposal system consists of: septic tank, absorption field of standard trenches or a dry well, house sewer and outlet sewer. In the septic tank, bacterial action breaks down sewage. Standard trenches or a dry well handles final disposal of liquid from the septic tank. The house sewer brings wastes to the tank and the outlet sewer carries sewage liquids (effluent) from the absorption field.

Service Entrance: Secondary passage or opening which is intended for loading and unloading and delivery and removal of merchandise or goods and which is not intended as a public entrance.

Setback: The minimum horizontal distance between a building and street or lot line. Distances are to be measured from the most outwardly extended portion of the structure at ground level.

Sewage Treatment System: A septic tank and soil absorption system or other individual or cluster type sewage treatment system as described and regulated in the City Code.

Sewer System: Pipelines or conduits, pumping stations, and force main, and all other construction devices, appliances, or appurtenances used for conducting sewage or industrial waste or other wastes to a point of ultimate disposal.

Sexually Oriented Uses: Sexually oriented uses include adult bookstores, adult motion picture theaters, adult motion picture sales/rentals, adult mini-motion picture theaters, adult massage parlors, adult steam room/bathhouse/sauna facilities, adult companionship establishments, adult rap/conversation parlors, adult health/sport clubs, adult cabarets, adult novelty businesses, adult motion picture arcades, adult modeling studios, adult hotels/motels, adult body painting studios, and other premises, enterprises, establishments, businesses or places open to some or all members of the public, at or in which there is an emphasis on the presentation, display, depiction or description of "specified sexual activities" or "specified anatomical areas" which are capable of being seen by members of the public. Activities classified as obscene as defined by Minnesota Statutes 617.241, as may be amended, are not included.

1. Specified Anatomical Areas:

    a. Less than completely and opaquely covered human genitals, pubic region, buttock, anus, or female breast(s) below a point immediately above the top of the areola; and

    b. Human male genitals in a discernibly turgid state, even if completely and opaquely covered.

2. Specified Sexual Activities:

    a. Actual or simulated sexual intercourse, oral copulation, anal intercourse, oral-anal copulation, bestiality, direct physical stimulation of unclothed genitals, flagellation or torture in the context of a sexual relationship, or the use of excretory functions in the context of a sexual relationship, and any of the following sexually-oriented acts or conduct: anilingus, buggery, coprophagy, coprophilia, cunnilingus, fellatio, necrophilia, pederasty, pedophilia, piquerism, sapphism, zooerasty; or

    b. Clearly depicted human genitals in the state of sexual stimulation, arousal or tumescence; or

    c. Use of human or animal ejaculation, sodomy, oral copulation, coitus, or masturbation; or

    d. Fondling or touching of nude human genitals, pubic region, buttocks, or female breast; or

    e. Situations involving a person or persons, any of whom are nude, clad in undergarments or in sexually revealing costumes, and who are engaged in activities involving the flagellation, torture, fettering, binding or other physical restraint of any such persons; or

f. Erotic or lewd touching, fondling or other sexually-oriented contact with an animal by a human being; or

g. Human excretion, urination, menstruation, vaginal or anal irrigation.

3. Sexually Oriented Uses - Accessory: The offering of retail goods for sale which are classified as sexually oriented uses on a limited scale and which are incidental to the primary activity and goods and/or services offered by the establishment. Examples of such items include the sale of adult magazines, the sale and/or rental of adult motion pictures, the sale of adult novelties, and the like.

4. Sexually Oriented Uses - Principal: The offering of goods and/or services which are classified as sexually oriented uses as a primary or sole activity of a business or establishment and include but are not limited to the following:

a. Sexually Oriented Use - Body Painting Studio: An establishment or business which provides the service of applying paint or other substance, whether transparent or non-transparent, to or on the body of a patron when such body is wholly or partially nude in terms of "specified anatomical areas".

b. Sexually Oriented Use – Bookstore: A building or portion of a building uses for the barter, rental or sale of items consisting of printed matter, pictures, slides, records, audio tape, videotape, or motion picture film if such building or portion of a building is not open to the public generally but only to one or more classes of the public extending any minor by reason of age or if a substantial or significant portion of such items are distinguished or characterized by an emphasis on the depiction or description of "specified sexual activities" or "specified anatomical areas".

c. Sexually Oriented Use – Cabaret: A building or portion of a building used for providing dancing or other live entertainment, if such building or portion of a building excludes minors by virtue of age or if such dancing or other live entertainment is distinguished or characterized by an emphasis on the presentation, display, depiction or description of "specified sexual activities" or "specified anatomical areas".

d. Sexually Oriented Use - Companionship Establishment: A companionship establishment which excludes minors by reason of age, or which provides the service of engaging in or listening to conversation, talk or discussion between an employee of the establishment and a customer, if such service is distinguished or characterized by an emphasis on "specified sexual activities" or "specified anatomical areas".

e. Sexually Oriented Use - Conversation/Rap Parlor: A conversation/rap parlor which excludes minors by reason of age, or which provides the service of engaging in or listening to conversation, talk, or discussion, if such service is distinguished or characterized by an emphasis on "specified sexual activities" or "specified anatomical areas".

f. Sexually Oriented Use - Health/Sport Club: A health/sport club which excludes minors by reason of age, or if such club is distinguished or characterized by an emphasis on "specified sexual activities" or "specified anatomical areas".

g. Sexually Oriented Use - Hotel or Motel: Adult hotel or motel means a hotel or motel from which minors are specifically excluded from patronage and wherein material is presented which is distinguished or characterized by an emphasis on matter depicting, describing or relating to "specified sexually activities" or "specified anatomical areas".

h. Sexually Oriented Use - Massage Parlor, Health Club: A massage parlor or health club which restricts minors by reason of age, and which provides the services of massage, if such service is distinguished or characterized by an emphasis on "specified sexual activities" or "specified anatomical areas".

i. Sexually Oriented Use - Mini-Motion Picture Theater: A building or portion of a building with a capacity for less than 50 persons used for presenting material if such building or portion of a building as a prevailing practice excludes minors by virtue of age, or if such material is distinguished or characterized by an emphasis on "specified sexual activities" or "specified anatomical areas" for observation by patrons therein.

j. Sexually Oriented Use - Modeling Studio: An establishment whose major business is the provision, to customers, of figure models who are so provided with the intent of providing sexual stimulation or sexual gratification to such customers and who engage in "specified sexual activities" or display "specified anatomical areas" while being observed, painted, painted upon, sketched, drawn, sculptured, photographed, or otherwise depicted by such customers.

k. Sexually Oriented Use - Motion Picture Arcade: Any place to which the public is permitted or invited wherein coin or slug-operated or electronically, electrically or mechanically controlled or operated still or motor picture machines, projectors or other image-producing devices are maintained to show images to five or fewer persons per machine at any one time, and where the images so displayed are

distinguished or characterized by an emphasis on depicting or describing "specified sexual activities" or "specified anatomical areas".

l. Sexually Oriented Use - Motion Picture Theater: A building or portion of a building with a capacity of 50 or more persons used for presenting material if such building or portion of a building as a prevailing practice excludes minors by virtue of age or if such material is distinguished or characterized by an emphasis on "specified sexual activities" or "specified anatomical areas" for observation by patrons therein.

m. Sexually Oriented Use - Novelty Business: A business which has as a principal activity the sale of devices which stimulate human genitals or devices which are designed for sexual stimulation.

n. Sexually Oriented Use – Sauna: A sauna which excludes minors by reason of age, or which provides a steam bath or heat bathing room used for the purpose of bathing, relaxation, or reducing, utilizing steam or hot air as a cleaning, relaxing or reducing agent, if the service provided by the sauna is distinguished of characterized by an emphasis on "specified sexual activities" or "specified anatomical areas".

o. Sexually Oriented Use - Steam Room/Bathhouse Facility: A building or portion of a building used for providing a steam bath or heat bathing room used for the purpose of pleasure, bathing, relaxation, or reducing, utilizing steam or hot air as a cleaning, relaxing or reducing agent if such building or portion of a building restricts minors by reason of age of if the service provided by the steam room/bathhouse facility is distinguished or characterized by an emphasis on "specified sexual activities" or "specified anatomical areas".

Shopping Center: An integrated grouping of commercial stores, under single ownership or control.

Shoreland Related:

1. Bluff: A topographic features such as a hill, cliff, or embankment having the following characteristics (an area with an average slope of less than eighteen (18) percent over a distance for fifty (50) feet or more shall not be considered part of the bluff):

   a. Part or all of the features is located in a shoreland area.

   b. The slope rises at least twenty-five (25) feet above the ordinary high water level of the waterbody.

c. The grade of the slope from the toe of the bluff to a point twenty-five (25) feet or more above the ordinary high water level averages thirty (30) percent or greater.

d. The slope must drain toward the waterbody.

2. Bluff Impact Zone: A bluff and land located within twenty (20) feet from the top of the bluff.

3. Boathouse: A structure designed and used primarily for the storage of boats or boating equipment.

4. Commissioner: The Commissioner of the Department of Natural Resources.

5. Development: The division of a parcel of land into two (2) or more parcels; the construction, reconstruction, conversion, structural alteration, relocation or enlargement of any structure; any land disturbance, and any use or extension of the use of land.

6. Guest Cottage: A structure used as a dwelling unit that may contain sleeping spaces and kitchen and bathroom facilities in addition to those provided in the primary dwelling unit on a lot.

7. Impervious Surface: Any structure or surface which interferes to any degree with the direct absorption of water into the ground, including but not limited to, roofs, sidewalks, paved driveways and parking areas, patios, tennis courts, swimming pools, or any other similar surface.

8. Intensive Vegetation Clearing: The complete removal of trees or shrubs in a contiguous patch, strip, row or block.

9. Ordinary High Water Level: The boundary of public waters and wetlands, and shall be an elevation delineating the highest water level which has been maintained for a sufficient period of time to have evidence upon the landscape, commonly that point where the natural vegetation changes from predominantly aquatic to predominantly terrestrial. For watercourses, the ordinary high water level is the elevation of the top of the bank of the channel. For reservoirs and flowage, the ordinary high water level is the operating elevation of the normal summer pool.

10. Public Waters: Any waters as defined in Minnesota Statutes, Section 105.37, Subdivisions 14 and 15.

11. Public Waters - General Development (GD): Large, deep lakes or lakes of varying sizes and depths with high levels and mixes of existing development. These lakes often are extensively used for recreation and, except for the very large lakes, are heavily developed around the shore. Second and third

tiers of development are fairly common. The larger examples in this class can accommodate additional development and use.

12. Sensitive Resource Management: The preservation and management of areas unsuitable for development in their natural state due to constraints such as shallow soils over ground water or bedrock, highly erosive or expansive soils, steep slopes, susceptibility to flooding, or occurrence of flora or fauna in need of special protection.

13. Sewer System: Pipelines or conduits, pumping stations, and force main, and all other constructions, devices, appliances, or appurtenances used for conducting sewage or industrial waste or other wastes to a point of ultimate disposal.

14. Shore Impact Zone: Land located between the ordinary high water level of a public water and a line parallel to it at a setback of fifty (50) percent of the structure setback.

15. Shoreland: Land located within the following distances from public waters: one thousand (1,000) feet from the ordinary high water level of a lake, pond, or flowage; and three hundred (300) feet from a river or stream, or the landward extent of a floodplain designated by Ordinance on a river or stream, whichever is greater. The limits of shorelands may be reduced whenever the waters involved are bounded by topographic divides which extend landward from the waters for lesser distances and when approved by the Commissioner.

16. Significant Historic Site: Any archaeological site, standing structure, or other property than meets the criteria for eligibility to the National Register of Historic Places or is listed in the State Register of Historic Sites, or is determined to be an unplatted cemetery that falls under the provisions of Minnesota Statutes, Section 307.08. A historic site meets these criteria if it is presently limited on either register or if it is determined to meet the qualifications for listening after review by the Minnesota State Archaeologist or the Director of the Minnesota Historical Society. All unplatted cemeteries are automatically considered to be significant historic sites.

17. Steep Slope: Land where agricultural activity or development is either not recommended or described as poorly suited due to slope steepness and the site's soil characteristics, as mapped and described in available County soil surveys or other technical reports, unless appropriate design and construction techniques and farming practices are used in accordance with the provisions of the Ordinance. Where specific information is not available, steep slopes are lands having slopes over twelve (12) percent, as measured over horizontal distances of fifty (50) feet or more, that are not bluffs.

18. Surface Water-Oriented Commercial Use: The use of land for commercial purposes, where access to and use of a surface water feature is an integral part of the normal conductance of business. Marinas, resorts, and restaurants with transient docking facilities are examples of such use.

19. Toe of the Bluff: The lower part of a fifty (50) foot segment with an average slope exceeding eighteen (18) percent.

20. Top of the Bluff: The higher point of a fifty (50) foot segment with an average slope exceeding eighteen (18) percent.

21. Water-Oriented Accessory Structure or Facility: A small, above ground building or other improvement, except stairways, fences, docks, and retaining walls, which because of the relationship of its use to a surface water feature, reasonably needs to be located closer to public waters than the normal structure setback. Examples of such structures and facilities include boathouses, gazebos, screen houses, fish houses, pump houses, and detached docks.

22. Wetland: A surface water feature classified as a wetland in the United States Fish and Wildlife Service Circular No. 39 (1971 edition).

12, 17, 33, 36

Sign Related:

1. Alteration: Any change to a sign excluding routine maintenance, repair, painting or change of copy of any existing sign.

2. Animated Sign: Any sign that uses movement or change of lighting to depict action or create a specific effect or scene, including devices with or without a commercial message, such as spinners and windsocks, but not including barber poles and time and temperature signs.

3. Artificial Light: Illumination resulting from internal or external artificial light sources, including glare and reflected light byproducts of artificial light sources.

4. Beacon: Any light with one (1) or more beams directed into the atmosphere or directed at one (1) or more points not on the same lot as the light source; also, any light with one (1) or more beams that rotate or move.

5. Bench Signs: A sign which is affixed to a bench such as at a bus stop.

6. Building Facade: That portion of any exterior elevation of a building extending from grade to the top of the parapet wall or eaves and the entire width of the building elevation.

7. Cabinet Sign: A sign that has framing around the entire sign message with a removable face.

8. Canopy Sign: The area of copy, graphic, or identification which is affixed to a projection or extension of a building or structure, including a marquee, erected in such a manner as to provide a shelter or cover over the approach to any entrance of a store, building, or place of assembly.

33 9. Changeable Copy Sign, Electronic and Manual: A sign or portion thereof that displays electronic, non-pictorial text information in which each alphanumeric character, graphic or symbol is defined by a small number of matrix elements using different combinations of light emitting diodes (LEDs), fiber optics, light bulbs or other illumination devices within the display area.

Electronic changeable copy signs include computer programmable, microprocessor controlled electronic displays. Electronic changeable copy signs include projected images or messages with these characteristics onto buildings or objects. Electronic changeable copy signs do not include official signs.

Manual signs include those with characters, letters or illustrations that can be changed or rearranged manually without altering the face or the surface of the sign.

10. Commercial Speech: Speech advertising a business, profession, commodity, service or entertainment.

11. Copy: The wording on a sign surface either permanent or removable letter form.

33 12. Dynamic Display: Any characteristics of a sign that appear to have movement or that appear to change, caused by any method other than physically removing and replacing the sign or its components, whether the apparent movement or change is in the display, the sign structure or any other component of the sign. This includes displays that incorporate technology or methods allowing the sign face to change the image without having to physically or mechanically replace the sign face or its components as well as any rotating, revolving, moving, flashing, blinking or animated display and any display that incorporates rotating panels, LED lights manipulated through digital input, digital ink or any other method or technology that allows the sign face to present a series of images or displays.

33 13. Electronic Graphic Display Sign: A sign or portion thereof that displays electronic, static images, static graphics or static pictures, with or without text information, defined by a small number of matrix elements using different combinations of light emitting diodes (LEDs), fiber optics, light bulbs or other

illumination devices within the display area where the message change sequence is accomplished immediately or by means of fade, re-pixelization or dissolve modes.

Electronic graphic display signs include computer programmable, microprocessor controlled electronic or digital displays. Electronic graphic display signs include projected images or messages with these characteristics onto building or other objects.

14. Flashing Sign: An illuminated sign upon which the artificial light is not kept constant in terms of intensity or color when the sign is illuminated.

15. Freestanding Sign: A self-supported sign not affixed to another structure.

16. Ground/Low Profile Sign: A sign that is intended to be incorporated into some form of landscaping design scheme or planter box, is not elevated from the ground by means of a pole or free-standing support structure, but is placed directly on the ground or on an interior planter base which is incorporated into such a design arrangement.

17. Illuminated Sign: A sign illuminated by an artificial light source either directed upon it or illuminated from an interior source.

18. Integral Sign: A sign carved into stone, concrete or similar material or made of bronze, aluminum, or other permanent type of construction and made an integral part of the structure.

19. Marquee: See canopy.

20. Maximum Height of Sign: The vertical distance from the base of the sign, or the grade of the road centerline, whichever is higher, to the top of the sign.

21. Monument Sign: A freestanding sign that is intended to be incorporated into some form of landscaping design scheme or planter box, is attached to the ground by means of a freestanding support structure, is solid from grade to the top of the structure, has materials that are constructed of the same primary building materials of the principal structure, is placed directly on the ground or on an interior planter base which is incorporated into a design arrangement. A monument sign shall be considered as one sign though it may have two (2) faces.

22. Motion Sign: Any sign which revolves, rotates, has moving parts, or gives illusion of motion.

23. Multi-Faced Sign: Any sign with a sign face oriented to more than two (2) directions.

33 24. Multivision Sign: Any sign composed in whole or part of a series of vertical or horizontal slats or cylinders that are capable of being rotated at intervals so that partial rotation of the group of slats or cylinders produces a different image and when properly functioning allows on a single sign structure the display at any given time one of two (2) or more images.

25. Neon Sign: Any sign that utilizes a brightly colored gas discharge lamp without filaments that is bent into letters or designs.

26. Non-Commercial Speech: Dissemination of messages not classified as Commercial Speech which include, but are not limited to, messages concerning political, religious, social, ideological, public service and informational topics.

27. Off-Premises Sign: A commercial speech sign which directs the attention of the public to a business, activity conducted, or product sold or offered at a location not on the same lot where such sign is located. For purposes of this sign ordinance, easements and other appurtenances shall be considered to be outside such lot and any sign located or proposed to be located in an easement or other appurtenance shall be considered an off-premises sign.

33 28. Official Sign: Signs of a public noncommercial nature including public notification signs, safety signs, traffic signs, direction to public facilities when erected by or on behalf of a public official or employee in the performance of official duty.

29. On-Premises Messages: Identify or advertise an establishment, person, activity, goods, products or services located on the premises where the sign was installed.

30. Portable Sign: Any sign which is manifestly designed to be transported, including by trailer on its own wheels, even though the wheels of such sign may be removed and the remaining chassis or support is converted to another sign or attached temporarily or permanently to the ground since this characteristic is based on the design of such a sign.

31. Principal Building: A building or buildings in which is conducted the principal use of the lot, not including storage buildings, garages, and buildings for other clearly accessory uses.

32. Principal Frontage: The wall of the principal building on a lot which fronts toward the principal public streets.

33. Projecting Sign: A sign, other than a wall sign, which is affixed to a building and which extends perpendicular from the building wall.

34. Public Entrance: Any passage or opening which affords entry and access to the general public or customer.

35. Public Entrance, Common: A public entrance providing access for the utilization and benefit of two (2) or more tenants or building occupants.

36. Pylon Sign: A freestanding sign erected on one (1) or more freestanding shafts, posts, or piers which are solidly affixed to the ground and not attached to a building. A pylon sign shall be considered as one (1) sign though it may have two (2) faces.

37. Roof Line: The top of the cornice or, when the building has a pitched roof, the intersection of the outside wall with the roof.

38. Roof Sign: Any sign which is erected, constructed or attached wholly or in part upon any roof or over the highest roof line of a building.

39. Rotating Sign: A sign which revolves or rotates on its axis by mechanical means.

40. Service Entrance: Secondary passage or opening to a structure which is intended for delivery and removal of merchandise or goods, and which is not intended as a public entrance.

41. Sign: Any letter, word or symbol, poster, picture, statuary, reading matter or representation in nature of advertisement, announcement, message or visual communication, whether painted, posted printed, affixed or constructed, including all associated brackets, braces, supports, wires and structures, which is displayed for informational or communicative purposes.

22. Sign Area: The surface of the sign upon, against or through which the message of the sign is exhibited.

43. Sign Setback: The distance from the property line and curb to the nearest part of the sign, measured perpendicularly to the property line or curb.

44. Sign Structure: The supports, uprights, bracing and framework for a sign.

45. Special Events: A temporary indoor or outdoor promotional or sales event.

46. Street Frontage: The side of a lot abutting one (1) or more streets. An interior lot has one (1) street frontage and a corner lot has two (2) or more frontages.

47. Temporary Indoor Promotional or Sales Event: A temporary promotional or sales event directed towards the general public including only grand openings, storewide sales, craft shows, registration for day care, an

educational, recreational, civic or religious activity, and community celebrations.

48. Temporary Outdoor Promotional or Sales Event: A temporary promotional or special event sale directed towards the general public, including only grand opening sales, storewide sales of materials and products that are typically sold or serviced on the premises, registration for day care, an educational, recreational, civic or religious activity, community celebrations, warehouse sales, tent sales, sidewalk sales, craft shows, flea markets, inventory reduction and liquidation sales, and mechanical or animal rides.

49. Total Allowable Sign Area: The maximum allowable gross surface area in square feet of a sign or signs. The maximum number of signs cannot be arranged and integrated so as to create a surface area in excess of this requirement.

50. Traffic Sign: A sign which is erected by a governmental unit for the purpose of directing or guiding traffic.

51. UL Approved: A device which has been approved by the "Underwriters' Laboratories".

33 52. Video Display Sign: A sign that changes its message or background in a manner or method of display characterized by motion or pictorial imagery, which may or may not include text and depicts action or a special effect to imitate movement, the presentation of pictorials or graphics displayed in a progression of frames that gives the illusion of motion, including, but not limited to, the illusion of moving objects, moving patterns or bands or light, or expanding or contracting shapes, not including electronic changeable copy signs. Video display signs include projected images or messages with these characteristics onto buildings or other objects.

53. Wall Sign: A sign affixed to the exterior wall of a building and which is parallel to the building wall. A wall sign does not project more than twelve (12) inches from the surface to which it is attached, nor extend beyond the top of the parapet wall. Banners do not qualify as a wall sign.

54. Wall Graphics: A sign painted directly on an exterior wall.

55. Window Sign: A temporary sign affixed to the outside or inside of a window or inside the building within three (3) feet of a window in view of the general public.

Site Plan: A map drawn to scale depicting the development of a tract of land, including, but not limited to, the location and relationship of structures, streets, driveways, recreation areas, parking areas, utilities, landscaping, and walkways, as related to a proposed development.

Slope: Means the degree of deviation of a surface from the horizontal, usually expressed in percent of degrees.

40 **Small Wireless Facility:** Small wireless facility means a wireless facility that meets both of the following qualifications:

(1) Each antenna is located inside an enclosure of no more than six cubic feet in volume or could fit within such an enclosure; and

(2) All other wireless equipment associated with the small wireless facility provided such equipment is, in aggregate no more than twenty-eight (28) cubic feet in volume, not including electric meters, concealment elements, telecommunications demarcation boxes, battery backup power systems, ground equipment, power transfer switches, cutoff switches, cable conduit, vertical cable runs for the connection of power and other services, and any equipment concealed from public view within or behind an existing structure or concealment.

Solar Energy System: Any solar collector or other solar device or any structural design of a building whose primary purpose is to collect, convert and store solar energy for useful purposes including heating and cooling of buildings, domestic water heating, electric power generation and other energy using processes.

Stacking Area (Magazine Space): That are which allows for a line of automobiles in such instances as drive-up tellers and other vehicle service areas.

Story: That portion of a building included beneath the upper surface of a floor and upper surface of floor next above, except that the top-most story shall be that portion of a building included between the upper surface of the top-most floor and the ceiling or roof above. If the finished floor level directly above a basement or cellar, or unused under floor space is more than six (6) feet above grade as defined herein for more than fifty (50) percent of the total perimeter or is more than twelve (12) feet above grade as defined herein at any point, such basement or unused under floor space shall be considered as a story.

Story, Half: That portion of a building under a gable, hip or gambrel roof, the wall plates of which, on at least two (2) opposite exterior walls, are not more than two (2) feet above the floor of such story, and basements where less than one-half (1/2) of the floor to ceiling height is below the average of the highest and lowest point of that portion of the lot covered by the building.

Street: A public right-of-way for vehicular traffic, whether designated as a highway, thoroughfare, arterial, parkway, collector, through-way, road, avenue, boulevard, lane, place, drive, court or otherwise designated, which has been dedicated or deeded to the public for public use and which affords principal means of access to abutting property.

Street-Collector: Collector roadways connect neighborhood within and between subregions and distribute traffic between arterials and local streets. Parking is restricted as necessary and posted speed limits typically range between 30 and 45 mph. Collector streets typically should have two driving lanes, two parking lanes, and a bicycle/pedestrian surface if necessary. Collector streets are typically spaced 0.25-1.0 miles apart. Traffic control typically involves local street stops, four-way stops, and some traffic signals. Collectors typically carry 1,000 - 15,000 vehicles per day.

Street-Local: Local streets provide direct land access within neighborhoods and other homogeneous land use areas and provide connections to collector streets. Parking is usually unrestricted, the posted speed limit is 30 mph or less, and streets are two lanes wide plus space for parking. Traffic control is most likely to involve strategies such as stop signs, cul-de-sacs, and diverters. Local streets typically carry about 1,000 vehicles or less per day. Residential streets typically carry about ten (10) trips per household per day.

Street-Minor Arterial: Minor arterials connect adjacent subregions and activity centers within subregions. Land access is usually restricted and trips are somewhat longer than on collector streets. Parking is often restricted and the posted speed limit is 35-45 mph. Width is dependent on the volume carried. Minor arterials are typically spaced 0.5 - 2.0 miles apart. Traffic control typically includes traffic signal timing and land access spacing. Typical traffic volumes range from 5,000 to 30,000 ADT.

Street Frontage: The proximity of a parcel of land to one (1) or more streets. An interior lot has one (1) street frontage and a corner lot has two (2) frontages.

Street-Intermediate Arterial: Intermediate arterials function at a level between the minor arterial and major arterial categories. Intermediate arterials are not limited access facilities but serve primarily trips between rather than within subregions.

Street Pavement: The wearing or exposed surface of a street or roadway used by vehicular traffic.

Street-Principal (Major) Arterial: Major arterials provide a high level of mobility between subregions, serving medium to long distance trips. Principal arterials are grade separated or have high capacity controlled at-grade intersections. No parking is permitted, the posted speed limit is typically 40-55 mph and traffic volumes range from 10,000 to 50,000 ADT. Major arterials are typically spaced one to three miles apart.

Street Width: The shortest distance between the lines delineating the right-of-way of a street.

Structure: Anything which is built, constructed or erected; an edifice or building of any kind; or any piece of work artificially built up and/or composed of parts joined together in some definite manner whether temporary or permanent in character. Among other things, structures include buildings, manufactured homes, walls, fences, swimming pools, billboards and poster panels.
Structure, Public: An edifice or building of any kind, or any piece of work artificially built upon or composed of parts joined together in some definite manner which is owned, or rented and operated by a federal, state or local government agency.

Structural Alteration: Any change in the supporting members of a building, such as bearing walls, column, beams, girders, or foundations.

Surveyor: A land surveyor registered under Minnesota State laws.

Swimming Pool: A structure designed to be used for swimming which has a depth of over eighteen (18) inches and/or having a larger plane surface of water greater than one hundred fifty (150) square feet.

39 **Temporary Structure:** Any structure that is designed, constructed and intended to be used on a short-term basis.

Townhouses: Structure housing three (3) or more dwelling units of not more than two (2) stories each and contiguous to each other only by the sharing of one (1) common wall, such structures to be of the town or row houses type as contrasted to multiple apartment structures. No single structure shall contain in excess of eight (8) dwelling units and each dwelling unit shall have separate and individual front and rear entrances.

38 **Transient Guest(s):** A person or persons who maintains a permanent residence not in the transient housing and rents or occupies a room or home for a limited duration of less than thirty-one days.

38 **Transient Lodging:** A building or facility constructed solely as a single-family home and where compensation of any kind is provided to the owner of their designee in exchange for periodic lodging to transient guests.

Travel Trailer: Any vehicle or structure designed and used for human living quarters which meets all of the following qualifications:

1. Is not used as the permanent residence of the owner or occupant.

2. Is used for temporary living quarters by the owner or occupant while engaged in recreational or vacation activities.

3. Is towed or otherwise transported by its own or by other motive power, on the public streets or highways incidental to such recreational or vacation activity.

The term "travel trailer" shall not include manufactured home. The term "travel trailer" shall include, but not be limited to, campers, camper tents, house trailers, camping trailers, travel trailers, tent trailers and any other self-propelled vehicle constructed to provide living accommodations. (See also the definition of "Recreation Vehicle".)

Travel Trailer Park: A part, court, camp site, lot, parcel or tract of land designed, maintained or intended for the purpose of supplying the location or accommodation for any trailers as defined herein, and upon which said trailers are parked. The term "travel trailer park" shall include all buildings used or intended for use as part of the equipment thereof whether a charge is made for the use of the park and its facilities or not. "Travel trailer park" shall not include automobile, mobile home or trailer sales lots on which unoccupied trailers or mobile homes are parked for purposes of inspection and sale.

Transportation Terminal: Taxi, air, train, bus and mass transit terminal and storage areas.

Triplex: Single structures which contain three (3) subdivided dwelling units all of which have individually separate entrances from the exterior of the structure.

Truck Stop: A motor fuel station devoted principally to the needs of trucks and which shall include eating and/or sleeping facilities.

Use: The purpose or activity for which the land or building thereon is designated, arranged, or intended or for which it is occupied, utilized or maintained, and shall include the performance of such activity as defined by the performance standards of this Ordinance.

Usable Open Space: A required ground area or terrace area on a lot which is graded, developed, and equipped and intended and maintained for either active or passive recreation or both, available and accessible to and usable by all persons occupying a dwelling unit or rooming unit on the lot and their guests. Such areas shall be grassed and landscaped or covered only for a recreational purpose. Roofs, driveways and parking areas shall not constitute usable open space.

Used Auto Parts: The processing, storage, and sale of second hand or used automobile or other vehicle parts provided such use is established entirely within enclosed buildings.

Variance: A variance is a relaxation of the terms of the Zoning Ordinance where such deviation will not be contrary to the public interest and where, owing to conditions unique to the individual property under consideration and not the result of the actions of the applicant, a literal enforcement of the ordinance would result in unnecessary and undue hardship.

Vegetation: Means the sum total of plant life in some area; or a plant community with distinguishable characteristics.

Veterinary Clinic: Those uses concerned with the diagnosis, treatment and medical care of animals including animal or pet hospitals.

Warehousing: Terminal facilities used primarily for the storage of goods and materials.

Warehousing, Limited: Terminal facilities having not greater than ten thousand (10,000) square feet of floor area used primarily for storage of goods and materials. Additionally, such facilities must be compatible with adjoining residential neighborhoods generating minimal traffic, no business activities after 6:00 PM or on Sundays, and no outside storage of materials or parking of vehicles outside the building during non-business hours.

Water Body: Means a body of water (lake, pond) or a depression of land or expanded part of a river, or an enclosed basis that holds water and is surrounded by land.

Watershed: The area drained by the natural and artificial drainage system, bounded peripherally by a bridge or stretch of high land dividing drainage areas.

Wind Energy Conversion System (WECS): Any device that is designed to convert wind power to another form of energy such as electricity, mechanical or heat (also referred to by such common names of wind charger, wind turbine and windmill).

40 **Wireless Support Structure:** Wireless support structure means a new or existing structure in a public right of way designed to support or capable of supporting small wireless facilities, as reasonably determined by a local government unit.

Wholesaling: The selling of goods, equipment and materials by bulk to another business that in turn sells to the final customer.

Yard: An open space on the same lot with a building, unoccupied and unobstructed by any portion of a structure from the ground upward, except as otherwise provided herein. In measuring a yard for the purpose of determining the width of a side yard, the mean horizontal distance between the lot line and main building shall be used.

Yard, Depth of: The mean horizontal distance between the line of a building and the lot line.

Yard, Front: The front yard of a lot shall be considered to be the area extending along the full length of a front lot line between side lot lines and to the depth of the front line of the principal building.

Yard, Rear: A space extending between the rear line of the main building and the rear line of the lot and extending the full width of the lot.

Yard, Rear Depth: The mean horizontal distance between the rear line of the building and the center line of an alley, where an alley exists; otherwise, a rear lot line.

Yard, Required: That distance specified in the yard requirements pertaining to setbacks. Setbacks and required yards are used interchangeably.

Yard, Side: A yard between the principal building and the side line of the lot extending from the front lot line of the lot to the rear yard.

Yard Waste Compost Facility: A site used to compost yard waste materials, including all structures or processing equipment used to control drainage; collect and treat leachate; and storage areas for the incoming waste, the final product, and residuals resulting from the composing process.

Yard Waste Materials: Garden wastes, leaves, lawn cuttings, weeds and pruning generated by residential or commercial properties.

Zero Lot Line: The reduction of side yard setback requirements to zero, permitting the placement of a structure near or adjacent to the side yard lot line. With zero lot line, no portion of the structure or accessory appurtenance shall project over the lot line.

Zoning Administrator: The duly appointed officer charged with the administration and enforcement of this Ordinance.

Zoning Amendment: A change authorized by the City either text of this Ordinance or in the mapped boundaries of the district.

Zoning District: An area or areas of the City (as delineated on the Zoning Map) set aside for specific uses with specific regulations and provisions for use and development as defined by this Ordinance.

Zoning District Overlay: A zoning district containing regulations superimposed upon other zoning district regulations and superseding the underlying zoning district use regulations. In the case of a conflict of said regulations the more restrictive shall apply.

Zoning District Underlying (Base): All zoning districts except overlay zoning districts.

Zoning Map: The map or maps incorporated into this Ordinance as part thereof, designating the zoning districts.

[2] 401.03. ADMINISTRATION - AMENDMENTS AND CONDITIONAL USE PERMITS

401.03.A. Procedure.

[13] 1. **Pre-Application.** Applicants requesting application for amendments or conditional use permits should contact the Zoning Administrator in order to set up a "pre-application" meeting with the City Administrator, City Engineer, City Attorney, City Planner, City Building Official, and other City staff to discuss the project in question. A pre-application "staff meeting" is strongly recommended for all types of proposals to answer questions relating to overall project concept, the application process, payment of fees, general ordinance requirements and the general details of the request. The pre-application meeting is not necessary but is recommended.

[7, 13] 2. **Application.** Request for amendments or conditional use permits, as provided within this Ordinance, shall be filed with the office of the City Administrator and with the office of the Community Development Director on an official application form. Such application shall be accompanied by a fee as outlined in Section 401.08. Such application shall also be accompanied by three (3) large scale copies and twenty (20) reduced scale (11" x 17") copies of detailed written and graphic materials fully explaining the proposed change, development, or use, and a mailing list provided by the applicant from the records of the Washington County Assessors Office for all homes, businesses and property located within three hundred fifty (350) feet of the subject property. Where necessary, the City Administrator or Community Development Director shall refer said application, along with all related information, to other City staff or agencies for their report and recommendation to the City Council. The request shall be placed on the agenda of the first possible Planning Commission meeting occurring after thirty (30) days from the date of submission. The application shall be considered officially submitted and the application approval time line commences when all the information requirements are complied with and the City has in writing acknowledged acceptance of the application.

3. **Proof of Ownership or Authorization**. The applicant shall supply proof of title of the property for which the amendment or conditional use is requested, consisting of an abstract of title or registered property abstract currently certified together with any unrecorded documents whereby the petitioners acquire a legal ownership or equitable ownership interest or supply written authorization from the owner(s) of the property in question to proceed with the request. Prior to approving an application for an amendment or conditional use permit, the City shall receive from the applicant certification that there are no delinquent property taxes, special assessments, interest, or City utility fees due upon the parcel of land to which the amendment or conditional use permit application relates.

4. **Public Hearing.** The Planning Commission shall conduct the hearing and report its findings and recommendations to the City Council. Notice of such hearing shall be published in conformance with the State law and individual notices. If it is a zoning district change or conditional use permit request, notice shall be published in

the official newspaper at least ten (10) days prior to hearing, and written notice of said hearing shall be mailed not less than ten (10) days nor more than thirty (30) days prior to the hearing to all owners of property, according to the Washington County assessment records, within three hundred fifty (350) feet of the parcel included in the request. The records of Washington County shall be deemed sufficient for determining the location and ownership of all such properties. A copy of the notice and a list of the property owners and addresses to which the notice was sent shall be attested and made a part of the records of the proceeding.

5. **Validity of Notice.** Failure of a property owner to receive said notice shall not invalidate any such proceedings as set forth within this Ordinance.

6. **Technical Report.** The Zoning Administrator shall instruct the appropriate staff persons to prepare technical reports, and provide general assistance in preparing a recommendation on the action to the City Council.

7. **City Council and Planning Commission Considerations.** The City Council and Planning Commission shall consider possible adverse effects of the proposed amendment or conditional use. Their judgment shall be based upon, but not limited to, the following factors:

   a. Relationship to the specific policies and provisions of the municipal comprehensive plan.

   b. The conformity with present and future land uses in the area.

   c. The environmental issues and geographic area involved.

   d. Whether the use will tend to or actually depreciate the area in which it is proposed.

   e. The impact on character of the surrounding area.

   f. The demonstrated need for such use.

   g. Traffic generation by the use in relation to capabilities of streets serving the property.

   h. The impact upon existing public services and facilities including parks, schools, streets, and utilities, and the City's service capacity.

   i. The proposed use's conformity with all performance standards contained herein (i.e., parking, loading, noise, etc.).

8. **Additional Information.** The City Council, the Planning Commission, and City staff shall have the authority to request additional information from the applicant concerning operational factors or to retain expert testimony with the consent and at

the expense of the applicant concerning operational factors, said information to be declared necessary to establish performance conditions in relation to all pertinent sections of this Ordinance. Failure on the part of the applicant to supply all necessary supportive information may be grounds for denial of the request.

9. **Planning Commission Review.** The applicant or a representative thereof shall appear before the Planning Commission in order to answer questions concerning the proposed amendment or conditional use. The Planning Commission shall recommend approval or denial of the request.

10. **City Council Review.** The City Council shall not act upon an amendment until they have received a report and recommendation from the Planning Commission. Upon completion of the report and recommendation by the Planning Commission, the request shall be placed on the agenda of the City Council. Such reports and recommendations shall be entered in and made part of the permanent written record of the City Council meeting. Upon receiving the report and recommendation of the Planning Commission and the City staff, the City Council shall have the option to set and hold a public hearing if deemed necessary. If, upon receiving said reports and recommendations of the Planning Commission, the City Council finds that specific inconsistencies exist in the review process and thus the final recommendation of the City Council will differ from that of the Planning Commission, the City Council may before taking final action, refer the matter back to the Planning Commission for further consideration. The City Council shall provide the Planning Commission with a written statement detailing the specific reasons for referral. This procedure shall be followed only one (1) time on a singular action.

11. **Finding of Fact.** The Planning Commission and City Council shall make a finding of fact and determine such actions or conditions relating to the request as they deem necessary to carry out the intent and purpose of this Ordinance.

12. **Official Publication.** An amendment shall not become effective until such time as the City Council approves a reading of an ordinance reflecting said amendment and after said ordinance is published in the official newspaper.

[13]13. **Recommendation - Amendment, Planning Commission.** The Planning Commission shall make a recommendation to the City Council on the amendment request.

[13]14. **Required Approval-Amendment, City Council.** Approval of a request for a zoning amendment shall require passage by a majority vote of the City Council. Amendments that change all or part of the existing classification of a zoning district from residential to either commercial or industrial require a four-fifths (4/5) majority vote of the City Council.

[13]15. **Recommendation - Conditional Use Permit, Planning Commission.** The Planning Commission shall make a recommendation to the City Council on the conditional use permit request.

[13]16. **Required Approval-Conditional Use Permit, City Council.** Approval of a request for conditional use permit shall require passage by a majority vote of the City Council.

[13]17. **Application Review Period.** Pursuant to Minnesota Statutes 15.99, an application for an amendment or conditional use permit shall be approved or denied within sixty (60) days from the date of its official and complete submission unless extended by the City pursuant to statute or a time waiver is granted by the applicant.

18. If a request for a conditional use permit receives approval of the City Council, the applicant shall record such with the Washington County Recorder within (30) days of the City Council approval date. The applicant, immediately upon recording such or as soon as is reasonably possible, shall furnish the City proof of recording. No building permits for the property in question will be granted until such proof of recording is furnished to the City.

19. **Renewal.** An approved conditional use permit shall be reviewed annually by the City Council at the direction of the City Administrator to determine compliance with the conditions of the permit and Ordinance. The City shall notify the permit holder of the date of the annual review at least ten (10) days prior to the review hearing.

401.03.B. Amendments /Conditional Use Permit - Initiation. The City Council or Planning Commission may, upon their own motion initiate a request to amend the text or the district boundaries, and/or request for a conditional use permit of this Ordinance. Any person owning real estate within the City may initiate a request to amend the district boundaries or text and/or request for a conditional use permit for said real estate in conformance with the provisions of this Ordinance.

401.03.C. Conditional Use Permit.

1. **Purpose.** The purpose of a conditional use permit is to provide the City of Oak Park Heights with a reasonable degree of discretion in determining the suitability of certain designated uses upon the general welfare, public health and safety. In making this determination, whether or not the conditional use is to be allowed, the City may consider the nature of the adjoining land or buildings, whether or not a similar use is already in existence and located on the same premises or on other lands immediately close by, the effect upon traffic into and from the premises, or on any adjoining roads, and all other or further factors as the City shall deem a prerequisite of consideration in determining the effect of the use on the general welfare, public health and safety.

2. **Reconsideration.** Whenever an application for a conditional use permit has been considered and denied by the City Council, a similar application for a conditional use permit affecting substantially the same property shall not be considered again

by the Planning Commission and City Council for at least six (6) months from the date of its denial.

3. **Information Requirement.** The information required for all conditional use permit applications generally consists of the following items, and shall be submitted when requested by the City:

   a. Site Development Plan:

      1) Location of all buildings on lots including both existing and proposed structures.

      2) Location of all adjacent buildings located within three hundred fifty (350) feet of the exterior boundaries of the property in question.

      3) Location and number of existing and proposed parking spaces.

      4) Vehicular circulation.

      5) Architectural elevations (type and materials used in all external surfaces).

      6) Location and type of all proposed lighting.

      7) Curb cuts, driveways, number of parking spaces.

      8) Site plan details such as trash receptacles, etc.

   b. Dimension Plan:

      1) Lot dimensions and area.

      2) Dimensions of proposed and existing structures.

      3) "Typical" floor plan and "typical" room plan.

      4) Setbacks of all buildings located on property in question.

      5) Proposed setbacks.

      6) Sanitary sewer and water plans with estimated use per day.

   c. Grading Plan:

      1) Existing contours.

      2) Proposed grading elevations.

3) Drainage configuration.

4) Storm sewer catch basins and invert elevations.

5) Spot elevations.

6) Proposed road profile.

7) Erosion control measures.

d. Landscape Plan:

1) Location of all existing trees, type, diameter, and which trees will be removed.

2) Location, type and diameter of all proposed plantings.

3) Location and material used for all screening devices.

4. **Lapse of Approval.**

a. Unless the City Council specifically approves a different time when action is officially taken on the request, the conditional use permit shall become null and void twelve (12) months after the date of approval, unless the property owner or applicant has substantially started the construction of any building, structure, addition or alteration, or use requested as part of the conditional use. The property owner or applicant shall have the right to submit an application for time extension in accordance with this section.

b. An application to extend the approval of a conditional use permit shall be submitted to the Zoning Administrator not less than thirty (30) days before the expiration of said approval. Such an application shall state the facts of the request, showing a good faith attempt to utilize the permit, and it shall state the additional time being requested to begin the proposed construction. The application shall be heard and decided by the City Council prior to the lapse of approval of the original request.

c. In making its determination on whether an applicant has made a good faith attempt to utilize the conditional use permit, the City Council shall consider such factors as the type, design, and size of the proposed construction, any applicable restrictions on financing, or special and/or unique circumstances beyond the control of the applicant which have caused the delay.

5. **Amended Conditional Use Permit.** An amended conditional use permit may be applied for and administered in a manner similar to that required for a new conditional use permit. Amended conditional use permits shall include re-

applications for permits that have been denied, requests for substantial changes in conditions or expansions of use, and as otherwise described in this Ordinance.

6. **Performance Bond.**

a. Except in the case of non-income producing residential property (excluding relocated structures), upon approval of a conditional use permit the City shall be provided, when deemed necessary by the City Council, with a surety bond, cash escrow, certificate of deposit, securities, or cash deposit prior to the issuing of building permits or initiation of work on the proposed improvements or development. Said security shall be non-cancelable and shall guarantee conformance and compliance with the conditions of the conditional use permit and the ordinances of the City.

b. The security shall be in the amount equal to one and one-half (1-1/2) times the City Engineer's or City Building Official's estimated costs of labor and materials for the proposed improvements. Said project can be handled in stages upon the discretion of the City Engineer and Building Official.

c. The City shall hold the security until completion of the proposed improvements or development and a certificate of occupancy indicating compliance with the conditional use permit and ordinances of the City has been issued by the City Building Official.

d. Failure to comply with the conditions of the conditional use permit or the ordinances of the City shall result in forfeiture of the security.

e. Whenever a performance guarantee is imposed by the City, the applicant shall be required to enter into a performance agreement with the City. This agreement is to provide authorization to the City to utilize the posted security and complete stipulated work should the applicant fail to meet the terms and conditions of the permit. Said agreement shall hold harmless the City for completion of the work and address other matters as may be determined by the City Attorney.

[2] 401.04. ADMINISTRATION-VARIANCES AND APPEALS

401.04.A. General Provisions and Standards.

1. **Purpose.** The purpose of this Section is to provide for deviations from the literal provisions of this Ordinance in instances where their strict enforcement would cause undue hardship because of circumstances unique to the individual property under consideration, and to grant such variances only when it is demonstrated that such actions will be in keeping with the spirit and intent of this Ordinance.

2. **Board of Zoning Adjustment.** The City Council shall serve as the Board of Adjustment and Appeals.

3. **Record.** All written reports and recommendations to the Board of Adjustment and Appeals from the City staff shall be entered in and made part of the permanent written record of the Board's meeting.

4. **Review Criteria.** In considering all requests for a variance and in taking subsequent action, the Planning Commission and City Council shall make a finding of fact that the proposed action will not:

   a. Impair an adequate supply of light and air to adjacent property.

   b. Unreasonably increase the congestion in the public street.

   c. Have the effect of allowing any district uses prohibited therein, permit a lesser degree of flood protection than the flood protection elevation for the particular area, or permit standards which are lower than those required by State law.

   d. Increase the danger of fire or endanger the public safety.

   e. Unreasonably diminish or impair established property values within the neighborhood, or in any way be contrary to the intent of this Ordinance.

   f. Violate the intent and purpose of the Comprehensive Plan.

   g. Violate any of the terms or conditions of Item 5, below.

5. **Conditions.** A variance from the terms of this Ordinance shall not be granted unless it can be demonstrated that:

   a. Undue hardship will result if the variance is denied due to the existence of special conditions and circumstances which are peculiar to the land, structure, or building involved and which are not applicable to other lands, structures or buildings in the same district.

1) Special conditions may include exceptional topographic or water conditions or, in the case of an existing lot or parcel of record, narrowness, shallowness, insufficient area or shape of the property.

2) Undue hardship caused by the special conditions and circumstances may not be solely economic in nature, if a reasonable use of the property exists under the terms of this Title.

3) Special conditions and circumstances causing undue hardship shall not be a result of lot size or building location when the lot qualifies as a buildable parcel.

b. Literal interpretation of the provisions of this Ordinance would deprive the applicant of rights commonly enjoyed by other properties in the same district under the terms of this Ordinance or deny the applicant the ability to put the property in question to a reasonable use.

c. The special conditions and circumstances causing the undue hardship do not result from the actions of the applicant.

d. Granting the variance requested will not confer on the applicant any special privilege that is denied by this Ordinance to other lands, structures or buildings in the same district under the same conditions.

e. The request is not a result of non-conforming lands, structures or buildings in the same district.

f. The request is not a use variance.

g. The variance requested is the minimum variance necessary to accomplish the intended purpose of the applicant.

h. The request does not create an inconvenience to neighboring properties and uses.

6. **Justification.** Application for a variance shall set forth reasons that the variance is justified in order to make reasonable use of the land, structure or building.

7. **Approval.** Should the Council find that the conditions outlined heretofore apply to the proposed lot or parcel, the Council may grant a variance from the strict application of this Ordinance so as to relieve such difficulties or hardships to the degree considered reasonable, provided such relief may be granted without impairing the intent of this Ordinance. The Planning Commission and City Council, in the case of major variance, based upon a report and recommendation by the City staff, shall have the power to advise and recommend such conditions related to the

variance regarding the location, structure, or use as it may deem advisable in the interest of the intent and purpose of this Ordinance.

[13]**401.04.B. Procedures.** Pursuant to Minnesota Statutes 15.99, an application for a variance shall be approved or denied within sixty (60) days from the date of its official and complete submission unless extended by the City pursuant to statute or a time waiver is granted by the applicant.

1. **Variances.**

a. **Processing.**

[13] 1) Applicants requesting application for variance should contact the Zoning Administrator in order to set up a "pre-application" meeting with the City Administrator, City Engineer, City Attorney, City Planner, City Building Official, and other City staff to discuss the project in question. A pre-application "staff meeting" is strongly recommended for all types of proposals to answer questions relating to overall project concept, the application process, payment of fees, general ordinance requirements and the general details of the request. The pre-application meeting is not necessary but is recommended.

[7, 13] 2) Request for variances, as provided within this Ordinance, shall be filed with the office of the City Administrator and Community Development Director on an official application form. Such application shall be accompanied by a fee as outlined in Section 401.08. Such application shall also be accompanied by three (3) copies of large scale copies and twenty (20) reduced (11" x 17") copies of detailed written and graphic materials fully explaining the proposed change, development, or use and a mailing list provided by the applicant from the records of the Washington County Assessors Office for all homes, businesses and property located within three hundred fifty (350) feet of the subject property. Prior to approving the application for a variance, the City shall receive from the applicant certification that there are no delinquent property taxes, special assessments, interest, or City utility fees due upon the parcel of land for which the variance application relates. The request shall be placed on the agenda of the first possible Planning Commission meeting occurring after thirty (30) days from the date of submission. The application shall be considered officially submitted and the application approval time line commences when all the information requirements are complied with and the City has in writing acknowledged acceptance of the application.

3) Upon receipt of a completed application, the Zoning Administrator shall set a public hearing following property hearing notification as applicable. The Planning Commission shall conduct the hearing and

report its findings and make recommendation to the City Council. Notice of said hearing shall consist of a legal property description of request, and be published in the official newspaper at least ten (10) days prior to the hearing and written notification of said hearing shall be mailed at least ten (10) days prior to all owners of land within three hundred fifty (350) feet of the boundary of the property in question (public right-of-way shall not be included in the three hundred fifty (350) foot measurement). The records of Washington County shall be deemed sufficient for determining the location and ownership of said property. A copy of the notice and a list of the property owners and addresses to which the notice was sent shall be attested and made a part of the records of the proceeding.

4) For properties within the Shoreland, Floodway or Flood Fringe Overlay District or River Impact District, the City shall submit to the Commissioner of Natural Resources a copy of the application for proposed variances sufficiently in advance so that the Commissioner will receive at least ten (10) day's notice of the hearing.

5) Failure of a property owner to receive said notice shall not invalidate any such proceedings as set forth within this Ordinance provided a bona fide attempt has been made to comply with the notice requirements of this Section.

6) The Zoning Administrator shall instruct the appropriate staff persons to prepare technical reports where appropriate, and provide general assistance in preparing a recommendation on the action to the Council.

7) The City Council, Planning Commission, and City staff shall have the authority to request additional information from the applicant concerning operational factors or to retain expert testimony with the consent and at the expense of the applicant concerning operational factors, said information to be declared necessary to establish performance conditions in relation to all pertinent sections of this Ordinance. Failure of an applicant to supply all necessary supportive information may be grounds for denial of the request.

8) The applicant or representative thereof shall appear before the Planning Commission to answer questions concerning the proposed variance.

[13] 9) The Planning Commission shall make a recommendation to the City Council on the variance request.

10) The City Council shall not consider or act upon a variance request until they have received a report and recommendation from the Planning Commission.

11) Upon completion of the report and recommendation of the Planning Commission, the request shall be placed on the agenda of the City Council. Such reports and recommendations shall be entered in and made part of the permanent written record of the City Council meeting.

12) The City Council shall review the application and may at its option conduct a public hearing on the request.

13) If, upon receiving said reports and recommendations of the Planning Commission, the City Council finds that specific inconsistencies exist in the review process and thus the final recommendation of the City Council will differ from that of the Planning Commission, the City Council may, before taking final action, refer the matter back to the Planning Commission for further consideration. The City Council shall provide the Planning Commission with a written statement detailing the specific reasons for referral. This procedure shall be followed only one (1) time on a singular request.

14) The City Council shall make a finding of fact and approve or deny a request for variance after receipt of the Planning Commission's recommendation.

13 15) A variance of this Ordinance shall be by four-fifths (4/5) majority vote of the City Council.

16) All decisions by the City Council involving a variance request shall be final except that an aggrieved person or persons shall have the right to appeal within thirty (30) days of the decision to the Washington County District Court.

17) A copy of all decisions granting variances for properties in the Shoreland, Floodway, Flood Fringe or River Impact District, shall be forwarded to the Commissioner of Natural Resources within ten (10) days of such action.

18) Whenever a variance has been considered and denied by the City Council, a similar application and proposal for the variance affecting the same property shall not be considered again by the Planning Commission or City Council for at least one (1) year from the date of its denial, except as follows:

a) If the applicant or property owner can clearly demonstrate that the circumstances surrounding the previous variance application have changed significantly.

b) If the City Council decides to reconsider such matter by a vote of not less than three-fifths (3/5).

19) If a request for a variance receives approval of the City Council, the applicant shall record such with the County Recorder within thirty (30) days of the City Council approval date. The applicant, immediately upon recording such, or as soon as is reasonably possible, shall furnish the City proof of recording. No building permits for the property in question will be granted until such proof of recording is furnished to the City.

401.04.C. Lapse of Variance.

1. **Timeline.** Unless the City Council specifically approves a different time when action is officially taken on the request, the variance shall become null and void twelve (12) months after the date of approval, unless the property owner or applicant has substantially started the construction of any building, structure, addition or alteration, or use requested as part of the variance. The property owner or applicant shall have the right to submit an application for time extension in accordance with this section.

2. **Application.** An application to extend the approval of a variance shall be submitted to the Zoning Administrator not less than thirty (30) days before the expiration of said approval. Such an application shall state the facts of the request, showing a good faith attempt to utilize the permit, and it shall state the additional time being requested to begin the proposed construction. The application shall be heard and decided by the City Council prior to the lapse of approval of the original request.

3. **Determination.** In making its determination on whether an applicant has made a good faith attempt to utilize the variance, the City Council shall consider such factors as the type, design and size of the proposed construction, any applicable restrictions on financing, or special and/or unique circumstances beyond the control of the applicant which have caused the delay.

401.04.D. Performance Bond.

1. **Bond.** Except in the case of non-income producing residential property (excluding relocated structures), upon approval of a variance the City shall be provided, when deemed necessary by the City Council, with a surety bond, cash escrow, certificate of deposit, securities, or cash deposit prior to the issuing of building permits or initiation of work on the proposed improvements or development. Said security shall be non-cancelable and shall guarantee conformance and compliance with the conditions of the variance and the ordinances of the City.

2. **Amount.** The security shall be in the amount equal to one and one-half (1-1/2) times the City Engineer's or City Building Official's estimated costs of labor and materials for the proposed improvements. Said project can be handled in stages upon the discretion of the City Engineer and Building Official.

3. **Term.** The City shall hold the security until completion of the proposed improvements or development and a certificate of occupancy indicating compliance with the variance and ordinances of the City has been issued by the City Building Official.

4. **Forfeiture.** Failure to comply with the conditions of the variance or the ordinances of the City shall result in forfeiture of the security.

5. **Performance Guarantee.** Whenever a performance guarantee is imposed by the City, the applicant shall be required to enter into a performance agreement with the City. This agreement is to provide authorization to the City to utilize the posted security and complete stipulated work, should the applicant fail to meet the terms and conditions of the variance. Said agreement shall hold harmless the City for completion of the work and address other matters as may be determined by the City Attorney.

401.04.E. Appeals.

1. **Board Designation.** The City Council shall serve as the Board of Adjustments and Appeals.

2. **Applicability.** An appeal shall only be applicable to an interpretation of legislative intent of provisions of this Ordinance. Opinions and evaluations as it pertains to the impact or result of a request are not subject to the appeal procedure.

3. **Filing.** An appeal from the ruling of an administrative officer of the City shall be made by the property owner or their agent within thirty (30) days after the making of the order appealed from.

4. **Stay of Proceedings.** An appeal stays all proceedings in furtherance of the action being appealed unless it is certified to the Board of Adjustment and Appeals, after the notice of appeal is filed, that by reason of facts stated in the certificate a stay would cause imminent peril to life and property. In such case, proceedings shall not be stayed other than by a restraining order which may be granted by a court of record on application, on notice to the City.

5. **Procedure.** The procedure for making such an appeal shall be as follows:

    a. The property owner or their agent shall file with the City a notice of appeal stating the specific grounds upon which the appeal is made. Said application shall be accompanied by a fee as established by City Council resolution.

b. The Board of Adjustment and Appeals shall make its decision by resolution within sixty (60) days.

6. **Appeals from the Board of Adjustment and Appeals.** Any person or persons, any private or public board, or taxpayer of the City aggrieved by any decision of the Board of Adjustment and Appeals, shall have the right to seek review within thirty (30) days of the decision with a court of record in the manner provided by the laws of the State of Minnesota, and particularly Minnesota Statutes, Chapter 462 as such statute may be from time to time amended, supplemented or replaced.

401.05. ADMINISTRATION - INTERIM USE PERMITS

401.05.A. Purpose. The purpose and intent of allowing interim uses is:

1. To allow a use for a brief period of time, not in excess of one year, until a permanent location is obtained or while the permanent location is under construction.

2. To allow a use that is presently acceptable, but that with anticipated development or redevelopment, will not be acceptable in the future.

3. To allow a use which is reflective of anticipated long range change to an area and which is in compliance with the Comprehensive Municipal Plan.

401.05.B. Procedure.

1. **Existing Uses.** Uses defined as interim uses which presently exist and which were legally established within a respective zoning district shall be considered approved.

[1] 2. **New Uses.** Uses defined as interim uses which do not presently exist within a respective zoning district shall be processed according to the standards and procedures for a conditional use permit as established with Section 401.03.A.

401.05.C. General Standards. An interim use shall comply with the following:

1. **Existing Uses.** Shall be in conformance with zoning and building standards in effect at the time of initial construction and development and shall continue to be governed by such regulations in the future.

2. **New Uses.**

   a. Conforms to all zoning regulations as otherwise applicable.

   b. The date or event that will terminate the use can be identified with certainty.

   c. The existence of the use will not impose additional costs on the public if it is necessary for the public to take the property in the future.

   d. The user agrees to any conditions that the City Council deems appropriate for permission of the use.

3. **Existing Uses and New Uses.**

a. Shall maintain harmony and compatibility with surrounding uses and with the architectural character and design standards of existing uses and development.

b. Conforms with all performance standards contained in the Zoning Ordinance (i.e., parking, loading, noise, etc.).

c. Shall have no detrimental effect upon the property values or the general health, safety, and welfare of the surrounding uses and property owners.

d. Traffic generated by the use does not overburden or exceed the capabilities of streets and other public services and facilities, including parks, schools, streets and utilities serving the area.

401.05.D. Termination. An interim use shall terminate on the happening of any of the following events, whichever first occurs:

1. The date stated in the permit or ordinance.

2. Upon violation of conditions under which the permit was issued.

3. Upon change in the City's zoning regulations which renders the use non-conforming.

4. The redevelopment of the use and property upon which it is located to permitted or conditional use as allowed within the respective zoning district.

401.06. PLANNED UNIT DEVELOPMENT

401.06.A. Purpose. This Section is established to provide comprehensive procedures and standards created to allow greater flexibility in the development of neighborhoods and/or non-residential areas by incorporating design modifications as part of a PUD conditional use permit or a mixture of uses when applied to a PUD District. The PUD process, by allowing deviation from the strict provisions of this Ordinance related to setbacks, lot area, width and depth, yards, etc., is intended to encourage:

1. Innovations in development to the end that the growing demands for residential, commercial, and industrial projects at all economic levels may be met in greater variety in tenure, type, design, and siting of dwellings and by the conservation and more efficient use of land in such developments.

2. The preservation and enhancement of desirable site characteristics such as natural topography and geologic features and the prevention of soil erosion.

3. An efficient use of land resulting in smaller networks of utilities and streets thereby lowering housing costs and public investments.

4. A development pattern in harmony with the objectives of the Oak Park Heights Comprehensive Plan.

5. A more desirable environment than would be possible through the strict application of zoning and subdivision regulations of the City.

6. To give the landowner and developer reasonable assurance of ultimate approval before expending complete design monies while providing City officials with assurances that the project will retain the character envisioned at the time of concurrence.

7. To allow variation from the provisions of this Ordinance including setbacks, height, lot area, width and depth, yards, etc. where deemed necessary by the City Council.

8. Higher standards of site and building design through the use of trained and experienced land planners, architects, landscape architects and engineers.

9. More convenience in location and design of development and service facilities.

10. A creative use of land and related physical development which allows a phased and orderly development and use pattern.

401.06.B. General Requirements and Standards.

1. **General Standards.** In its review of any application under this Section, the City Council shall consider comments on the application of those persons appearing before the Council and any staff report on the application. The Council also shall evaluate the effects of the proposed project upon the health, safety and welfare of residents of the community and the surrounding area and shall evaluate the project's conformance with the overall intent and purpose of this Section. If the Council determines that the proposed project will not be detrimental to the health, safety and welfare of residents of the community and the surrounding area and that the project does conform with the overall intent and purpose of this Section, it may approve a PUD permit, although it shall not be required to do so.

2. **Ownership.** An application for PUD approval must be filed by the landowner or jointly by all landowners of the property included in a project. The application and all submissions must be directed to the development of the property as a unified whole. In the case of multiple ownership, the approved Final Plan shall be binding on all owners.

3. **Comprehensive Plan Consistency.** The proposed PUD shall be consistent with the City Comprehensive Plan.

4. **City Code Consistency.** The proposed PUD shall be consistent with the City Code requirements for connections to the sanitary sewer.

5. **Common Open Space.** Common private or public open space and facilities at least sufficient to meet the minimum requirements established in the Comprehensive Plan and this Ordinance and such complementary structures and improvements are necessary and appropriate for the benefit and enjoyment of the residents of the PUD shall be provided within the area of the PUD.

6. **Operating and Maintenance Requirements for PUD Common Open Space/Facilities.** Whenever common private or public open space or service facilities are provided within the PUD, the PUD plan shall contain provisions to assure the continued operation and maintenance of such open space and service facilities to a predetermined reasonable standard. Common private or public open space and service facilities within a PUD may be placed under the ownership of one or more of the following, as approved by the City Council:

    a. Dedicated to public, where a community-wide use is anticipated and the City Council agrees to accept the dedication.

    b. Landlord control, where only use by tenants is anticipated.

    c. Property Owners Association, provided all of the following conditions are met:

1) Prior to the use or occupancy or sale or the execution of contracts for sale of an individual building unit, parcel, tracts, townhouse, apartment, or common area, a declaration of covenants, conditions and restrictions or an equivalent document or a document such as specified by Laws 1963, Chapter 457, Section 11 and a set of floor plans such as specified by Laws 1963, Chapter 457, Section 13 shall be filed with the City of Oak Park Heights, said filing with the City to be made prior to the filings of said declaration or document or floor plans with the recording officers of Washington County.

2) The declaration of covenants, conditions and restrictions or equivalent document shall specify that deeds, leases or documents of conveyance affecting buildings, units, parcels, tracts, townhouses, or apartments shall subject said properties to the terms of said declaration.

3) The declaration of covenants, conditions and restrictions shall provide that an owner's association or corporation shall be formed and that all owners shall be members of said association or corporation which shall maintain all properties and common areas in good repair and which shall assess individual property owners proportionate shares of joint or common costs. This declaration shall be subject to the review and approval of the City Attorney. The intent of this requirement is to protect the property values of the individual owner through establishing private control.

4) The declaration shall additionally amongst other things, provide that in the event the association or corporation fails to maintain properties in accordance with the applicable rules and regulations of the City of Oak Park Heights or fails to pay taxes or assessments on properties as they become due and in the event the said City of Oak Park Heights incurs any expenses in enforcing its rules and regulations, which said expenses are not immediately reimbursed by the association or corporation, then the City of Oak Park Heights shall have the right to assess each property its prorate share of said expenses. Such assessments, together with interest thereon and costs of collection, shall be a lien on each property against which each such assessment is made.

5) Membership must be mandatory for each owner, and any successive buyer.

6) The open space restrictions must be permanent and not for a given period of years.

7) The association must be responsible for liability insurance, local taxes, and the maintenance of the open space facilities deeded to it.

8) Property owner must pay their prorate share of the cost of the association by means of an assessment to be levied by the association which meets the requirements for becoming a lien on the property in accordance with Minnesota Statutes.

9) The association must be able to adjust the assessment to meet changed needs.

10) The by-laws and rules of the Association and all covenants and restrictions to be recorded must be approved by the City Council prior to the approval of the final PUD plan.

7. **Staging of Public and Common Open Space.** When a PUD provides for common private or public open space, and is planned as a staged development over a period of time, the total area of common or public open space or land escrow security in any stage of development shall, at a minimum, bear the same relationship to the total open space to be provided in the entire PUD as the stages or units completed or under development bear to the entire PUD.

8. **Density.**

a. The maximum allowable density in a PUD District shall be determined by standards negotiated and agreed upon between the applicant and the City. In all cases, the negotiated standards shall be consistent with the development policies as contained in the Oak Park Heights Comprehensive Plan. Whenever any PUD is to be developed in stages, no such stage shall, when averaged with all previously completed stages, have a residential density that exceeds one hundred twenty-five (125) percent of the proposed residential density of the entire PUD.

b. There shall be no density variation from the standards applied in an applicable zoning district for PUD conditional use permits.

9. **Utilities.** In any PUD, all utilities, including telephone, electricity, gas and telecable shall be installed underground.

10. **Utility Connections.**

a. **Water Connections.** Where more than one (1) property is served from the same service line, a shut off valve must be located in such a way that each unit's service may be shut off by the City, in addition to the normally supplied shut off by the street.

b. **Sewer Connections.** Where more than one (1) unit is served by a sanitary sewer lateral which exceeds three hundred (300) feet in length, provision must be made for a manhole to allow adequate cleaning and maintenance of

the lateral. All maintenance and cleaning shall be the responsibility of the property owners association or owner.

11. **Roadways.**

a. Private roadways within the project shall have an improved surface to twenty-four (24) feet or more in width and shall be so designed as to permit fire trucks to provide protection to each building.

b. No portion of the required twenty-four (24) foot road system may be used in calculating required off-street parking space or be used for parking.

12. **Landscaping.** In any PUD, landscaping shall be provided according to a plan approved by the City Council, which shall include a detailed planting list with sizes and species indicated as part of the Final Plan. In assessing the landscaping plan, the City Council shall consider the natural features of the particular site, the architectural characteristics of the proposed structure and the overall scheme of the PUD plan.

13. **Residential Project Standards.** The following requirements shall be imposed in addition to the general requirements set forth in this section with regard to any applications for condominium conversions:

a. No single townhouse structure shall contain more than eight (8) dwelling units.

b. Minimum unit lot frontage for townhouses shall be not less than twenty (20) feet.

c. Townhouses, Quadraminiums, cooperatives and condominiums will be subdivided on an individual unit basis according to the provisions of this Ordinance.

d. Condominium development and conversions shall be in compliance and adhere to the Uniform Condominium Act Laws of Minnesota - 1980 Chapter 582 as may be amended.

e. No application for permit for condominium conversion shall be accepted by the City Clerk without the written verification of the applicant on a form to be prescribed by the City Clerk, of the following information.

1) That there have been no increases in rent with regard to rental units proposed to be converted to condominiums by the applicant within one hundred twenty (120) days immediately preceding the filing of the application.

2) That there have been no evictions of tenants for reasons other than waste, non-payment of rent, or willful damage to property from rental units proposed to be converted to condominiums within one hundred twenty (120) days immediately preceding the filing of the application.

3) The names and addresses of all tenants or sub-tenants occupying rental units proposed to be converted to condominiums by the applicant.

4) The names and address of any individuals occupying a rental unit proposed to be converted to a condominium who are either sixty-two (62) years of age or older, or handicapped, as that term is defined in Minnesota Statutes 129A.01.

5) A statement by the applicant that he/she has provided by mail a true and correct copy of the application to any and all occupants of rental units proposed to be converted to condominiums.

6) A statement by the applicant identifying the fee owner, or owners of the premises to be converted into condominiums, further identifying all lien holders and/or persons having or claiming to have an interest of record in and to the structure.

f. Any structure proposed to be converted into a condominium shall be made to comply with the building code of the City of Oak Park Heights, and no sale or transfer of any unit therein for the purposes of occupancy or otherwise shall be allowed without the written certification by the Building Official for the City of Oak Park Heights that the proposed condominium structure and all dwelling units contained therein comply with all applicable building code specifications of the City of Oak Park Heights.

g. In addition to the notice and hearing requirements otherwise set forth herein, the applicant shall provide to the City Clerk written verification that written notice has been supplied to each occupant or lessee of the dwelling unit or apartment, stating the time, place and purpose of all hearings to be held with regard to the request for condominium conversion. The applicant shall also provide notice to the occupants and lessees of any dwelling unit or apartment building proposed to be converted into condominium use with notice that they shall be provided, upon their request, with access to all data in the possession of the applicant to be presented to the City Council by the applicant in advance of any hearing to be held thereon.

h. No application for condominium conversion shall be approved where the proposed conversion is not in compliance with the City's adopted Comprehensive Plan and adopted Housing Plan.

i. In addition to the rights and privileges of occupants, tenants, or sub-tenants as set forth in Minnesota Statutes 515A, 4-110, the applicant shall be required, as a condition of any condominium conversion approved by the City of Oak Park Heights, that all tenants or sub-tenants in possession of any structure proposed to be converted to condominium use who are sixty-two (62) years of age or older or handicapped, as that term is defined in Minnesota Statutes 129A.01, who do not elect to purchase that or any unit in the building as a condominium or who do not enter into a separate agreement extending their tenancy with the owner and/or applicant beyond the time of actual conversion to condominium units, shall be provided by the applicant with relocation benefits to defray the actual expense of relocating or moving, up to an amount not to exceed three hundred ($300.00) dollars.

14. **Non Residential Project Standards.**

a. **Purpose.** The purpose of this Section is to establish standards for non-residential projects, in addition to those standards contained elsewhere in this Ordinance for all PUD projects. All non-residential PUD projects shall be developed in accordance with the following area standards:

1) There shall be no minimum lot or area size required for a tract of land for which a PUD District project is proposed. There shall be no minimum lot or area size imposed for a PUD conditional use project except for the standards applicable within the zoning district in which it is to be utilized.

2) There shall be no minimum frontage on a public street required for a tract of land for which a PUD project is proposed.

3) The tract of land for which a non-residential PUD project is proposed shall have municipal water and sewer available to it.

4) Off-street parking and loading facilities for a non-residential PUD project shall be provided in accordance with Section 401.15.F. of this Ordinance.

5, 16 5) For non-residential PUD District projects, the normal standards of either the R-B, B-1, B-2, B-3, B-4, B-W and I zoning classifications shall apply to each project, excepting usage standards, as determined by the City Council and as provided above in Section 401.06.B.

6) In addition to the above standards, the City Council may impose such other standards for a non-residential PUD project as are reasonable and as the Council deems are necessary to protect and promote the general health, safety and welfare of the community and the surrounding area.

15. **Setbacks.**

a. The front, rear and side yard restrictions on the periphery of the Planned Unit Development site at a minimum shall be the same as imposed in the respective districts.

b. No building shall be located less than twenty (20) feet from the back of the curb line along those roadways which are part of the internal street pattern.

c. No building within the project shall be nearer to another building than one-half (½) the sum of the building heights of the two (2) buildings.

16. **Height.**

a. The maximum building height to be considered within a PUD District shall be thirty-five (35) feet.

b. There shall be no deviation from the height standards applied within the applicable zoning districts for PUD conditional use permits.

401.06.C. General Concept Stage.

1. **Application Procedure.**

13 a. Applicants requesting application for amendments or conditional use permits should contact the Zoning Administrator in order to set up a "pre-application" meeting with the City Administrator, City Engineer, City Attorney, City Planner, City Building Official, and other City staff to discuss the project in question. A pre-application "staff meeting" is strongly recommended for all types of proposals to answer questions relating to overall project concept, the application process, payment of fees, general ordinance requirements and the general details of the request. The pre-application meeting is not necessary but is recommended.

13 b. An applicant shall complete and submit to the City an application form for concept approval, together with a fee as outlined in Section 401.08. The applicant shall submit with an application such information as is required by the City, other information as is deemed necessary to explain the general intent of the application, and a mailing list provided by the applicant from the records of Washington County Assessors Office for all homes, businesses and property located within three hundred fifty (350) feet of the subject property. Should concept approval be granted for a PUD project, this approval in no way shall bind the City to subsequent approval of a General Plan of Development. The request shall be placed on the agenda of the first possible Planning Commission meeting occurring after thirty (30) days from the date of submission. The application shall be considered officially

submitted and the application approval time line commences when all the information requirements are complied with and the City has in writing acknowledged acceptance of the application.

c. All property owners within three hundred fifty (350) feet (public right-of-way shall not be included in such measurement) of the subject property shall be notified of this hearing, although the failure of any property owner to receive such notification shall not invalidate the proceedings. Notification shall be by mail to all such property owners, shall be given at least ten (10) days in advance of the hearing, and may include a larger geographic area if deemed advisable by the Zoning Administrator.

d. Upon filing of an application for PUD, the applicant of the proposed PUD shall arrange for and attend a conference with the City staff. At such conference, the applicant shall be prepared to generally describe the proposal for a PUD. The primary purpose of the conference shall be to provide the applicant with an opportunity to gather information and obtain guidance as to the general suitability of the proposal for the area for which it is proposed and its conformity to the provisions of this Ordinance before incurring substantial expense in the preparation of plans, surveys and other data.

2. **General Information.**

a. **Purpose.** The General Concept Plan provides an opportunity for the applicant to submit a plan to the City showing the basic intent and the general nature of the entire development without incurring substantial cost. This Concept Plan serves as the basis for the public hearing so that the proposal may be publicly considered at an early stage. The following elements of the proposed General Concept Plan represent the immediately significant elements which the City shall review and for which a decision shall be rendered:

1) Overall maximum PUD density range.

2) General location of major streets and pedestrian ways.

3) General location and extent of public and common open space.

4) General location of residential and non-residential land uses with approximate type and intensities of development.

5) Staging and time schedule of development.

2 b. **Schedule.**

13 1) Developer files application for a conditional use permit and rezoning (where applicable) concurrently with the submission of the general concept plan.

2) Developer meets with the City staff to discuss the proposed development.

3) The Zoning Administrator formally acknowledges filing and receipt of a complete application and sets a public hearing.

4) The Planning Commission holds a public hearing.

5) The petitioner and/or their representative shall appear before the Planning Commission at the hearing to answer questions regarding the proposed project.

6) The Planning Commission makes a recommendation to the City Council on the General Concept Plan.

13 7) The City Council reviews all recommendations and approves/denies the application(s). Approval of a PUD concept plan shall require passage by a majority vote of the City Council.

13 8) Pursuant to Minnesota Statutes 15.99, an application for a concept plan shall be approved or denied within sixty (60) days from the date of its official and complete submission, unless extended by the City pursuant to statute or a time waiver is granted by the applicant.

2 c. **Optional Submission of General Plan of Development Stage.** In cases of single stage PUDs or where applicant wishes to begin the first stage of a multiple stage PUD immediately, the General Plan of Development may be submitted for the proposed PUD simultaneously with the submission of the General Concept Plan. In such case, the applicant shall comply with all the provisions of the Ordinance applicable to submission of the General Plan of Development Stage. The Planning Commission and City Council shall consider such plans simultaneously and shall grant or deny the General Plan of Development approval in accordance with the provisions of this Section.

d. **Effect of Concept Plan Approval.** Unless the applicant shall fail to meet time schedules for filing General Plan of Development Stage and/or Final Plans or shall fail to proceed with development in accordance with the plans as approved or shall in any other manner fail to comply with any condition of this Ordinance or of any approval granted pursuant to it, a General Concept Plan which has been approved and a PUD Agreement signed by the applicant shall not be modified, revoked or otherwise impaired pending the

application for approval of the General Plan of Development Stage and Final Plans by any action of the City of Oak Park Heights without the consent of the applicant.

e. **Limitation on General Concept Plan Approval.** Unless a General Plan of Development covering the area designated in the General Concept Plan as the first stage of the PUD has been filed within twelve (12) months from the date Council grants General Concept Plan approval, or in any case where the applicant fails to file General Plan of Development Stage and Final Plans and to proceed with development in accordance with the provisions of this Ordinance and of an approved General Concept Plan, the approval may be revoked by Council action. In such case, the Council shall forthwith adopt a resolution repealing the General Concept Plan approval for that portion of the PUD that has not received final approval and re-establishing the zoning and other ordinance provisions that would otherwise be applicable. Upon application by the applicant, the Council at its discretion may extend for additional periods not in excess of six (6) months each, the filing deadline for any Development Stage Plan, when for good cause shown, such extension is necessary.

3. **Information Requirements.**

a. **Application Submitted.** The General Concept Plan of development submitted for a PUD project shall include as applicable, but not limited to the following information:

1) The landowner's name and address and interest in the subject property.

2) The applicant's name and address if different from the landowner.

3) The names and addresses of all professional consultants who have contributed to the development of the PUD plan being submitted, including attorney, land planner, engineer and surveyor.

4) Evidence that applicant has sufficient control over the subject property to effectuate the proposed PUD including a statement of all legal, beneficial, tenancy and contractual interests held in or affecting the subject property and including an up-to-date certificate of title, abstract of title, or registered property report, and such other evidence as the City Attorney may require to show the status of title or control of the subject property. Prior to approving an application for a PUD, the City shall receive from the applicant certification that there are no delinquent property taxes, special assessments, interest, or City utility fees due upon the parcel of land to which the PUD application relates.

[8] 5) All applications shall be accompanied by three (3) large scale copies and twenty (20) small scale (11" x 17") copies of detailed graphic materials fully explaining the proposed development, together with a mailing list provided by the applicant from the records of the Washington County Assessors Office for all homes, businesses, and properties within three hundred fifty (350) feet of the subject property.

b. **Present Status.**

1) Address and legal description of subject property.

2) Existing zoning classification and present use of subject property and all lands within one thousand (1,000) feet of subject property.

3) A map depicting existing development of subject property and all land within one thousand (1,000) feet thereof and locations of existing streets, property lines, easements, water mains and storm and sanitary sewers, with invert elevations on and within one hundred (100) feet of subject property.

c. **Market.** A written statement generally describing the proposed PUD and the market which it is intended to serve and the market demand. The statement is also to demonstrate the proposed PUD's relationship to the City's Comprehensive Plan and how the proposed PUD is to be designed, arranged and operated in order to permit the development and use of neighboring property in accordance with the applicable regulations of the City.

d. **Site Conditions.** Graphic reproductions of the existing site conditions at a scale of one (1) inch equals hundred (100) feet.

1) Contours - minimum two (2) foot intervals.

2) Location, type and extent of tree cover and vegetation.

3) Slope analysis.

4) Location and extent of water bodies, wetlands and streams and floodplains within three hundred (300) feet of the subject property.

5) Significant rock outcroppings.

6) Existing drainage patterns.

7) Vistas and significant views.

8) Soil conditions as they affect development.

All of the graphics should be the same scale as the final plan to allow each cross reference. The use of overlays is recommended for clear reference.

e. **Required Drawings.** Schematic drawings of the proposed development concept including, but not limited to, the general location of major circulation elements, public and common open space, buildings, structures, and other land uses, and buffering and screening.

f. **Dwelling Units and Land Use.** A statement of the estimated total number of dwellings units or square feet of developed land use activities proposed for the PUD and a tabulation of the proposed approximate allocations of land use expressed in acres and as a percent of the total project area, which shall include at least the following:

1) Area devoted to residential uses.

2) Area devoted to residential use by building type.

3) Area devoted to common open space.

4) Area devoted to public open space.

5) Approximate area devoted to streets.

6) Approximate area devoted to and number of off-street parking and loading spaces and related access.

7) Approximate area, and floor area, devoted to commercial uses.

8) Approximately area, and floor area, devoted to industrial or office use.

g. **Staging.** When the PUD is to be constructed in stages during a period of time extending beyond a single construction season, a schedule for the development of such stages or units shall be submitted stating the approximate beginning and completion date for each such stage or unit and the proportion of the total PUD public or common open space and structures/units to be provided or constructed during each such stage and the overall chronology of development to be followed from stage to stage.

h. **Open Space.** When the proposed PUD includes provisions for public or common open space or service facilities, a statement describing the provision that is to be made for the care and maintenance of such open space or service facilities. If it is proposed that such open space be owned and/or maintained by any entity other than a governmental authority, copies of the proposed articles of incorporation and by-laws of such entity shall be submitted.

i. **Restrictive Covenants.** General intents of any restrictive covenants that are to be recorded with respect to property included in the proposed PUD.

j. **Utility Plans.** Schematic utilities plans indicating placement of water, sanitary and storm sewers.

[2] k. **Submission Requirements.** The Planning Commission and City Council may excuse an applicant from submitting any specific item of information or document required in this stage, which it finds to be unnecessary to the consideration of the specific proposal for PUD approval. The Planning Commission and City Council may also require the submission of any additional information or documentation which it may find necessary or appropriate to full consideration of the proposed PUD or any aspect or stage thereof.

401.06.D. General Plan of Development.

[2] 1. **Purpose.** purpose of the General Plan of Development is to provide a specific and particular plan upon which the Planning Commission will base its recommendation to the Council and with which substantial compliance is necessary for the preparation of the Final Plan.

2. **Submission of Development Stage.**

[2] a. Upon approval of the General Concept Plan, and within the time frame established by this Section, the applicant shall file with the Zoning Administrator, a General Plan of Development consisting of information and submissions required by this Section of the City Code for the entire PUD or for one or more stages thereof in accordance with a Staging Plan approved as part of the General Concept Plan.

b. The General Plan of Development shall refine, implement and be in substantial conformity with the approved General Concept Plan. A detailed Plan shall be deemed not to be in substantial conformity with an approved General Concept Plan if it:

1) Significantly decreases the area approved for public and common open space or changes the general location of such areas.

2) Relocates approved circulation elements to any extent that would increase their functionability, adversely affect their relation to surrounding lands and circulation elements or reduce their effectiveness as buffers or amenities.

3) Significantly alters the arrangement of land uses within the PUD.

4) Delays by more than one (1) year any stage of an approved Staging Plan.

5) Departs from the General Concept Plan in any other manner which the City Council finds to materially alter the plan or concept for the proposed PUD.

3. **Time Extension.** General Plan of Development proposal shall be submitted within six (6) months of approval of the concept plan unless a time extension is approved by the City Council.

[2] 4. **Schedule.**

[13] a. Applicants requesting application for general plan of development approval should contact the Zoning Administrator in order to set up a "pre-application" meeting with the City Administrator, City Engineer, City Attorney, City Planner, City Building Official, and other City staff to discuss the project in question. A pre-application "staff meeting" is strongly recommended for all types of proposals to answer questions relating to overall project concept, the application process, payment of fees, general ordinance requirements and the general details of the request. The pre-application meeting is not necessary but is recommended.

[13] b. If a request for concept approval of a PUD project has been approved by the City Council, as the next step in the application procedure, an applicant shall submit to the City an application form for General Plan of Development approval for the proposed project as required herein, together with a fee as outlined in Section 401.08. The applicant shall submit with an application such information as is required by the City, such other information as deemed necessary to explain the general intent of the application, and a mailing list for all homes, businesses and property if different from that list created for the General Concept Plan. The request shall be placed on the agenda of the first possible Planning Commission meeting occurring after thirty (30) days from the date of submission. The application shall be considered officially submitted and the application approval time line commences when all the information requirements are complied with and the City has in writing acknowledged acceptance of the application.

c. Developer meets with the City staff to discuss specific development plans.

d. Immediately upon receipt of the Completed General Plan of Development, the Zoning Administrator shall refer such plan to the following City staff and/or official bodies for the indicated action:

1) The City Attorney for legal review of all documents.

2) The City Engineer for review of all engineering data for compliance with the requirements of this Ordinance and review of the City/Developer agreement.

3) The City Building Official for review of all plans for compliance with the requirements of this Ordinance, the State of Minnesota Uniform Building Code and any other applicable Federal, State, or local codes.

4) The City Planner for review of all plans for compliance with the intent, purpose and requirements of this Ordinance and conformity with the General Concept Plan and Comprehensive Plan.

5) The Planning Commission for review and recommendation to the City Council.

6) When appropriate, as determined by the City Administrator, to the Park Commission for review and recommendations.

7) When appropriate, as determined by the City Administrator, to other special review agencies such as the Watershed Districts, Soil Conservation Service, Highway Departments, or other affected agencies.

All staff designated in paragraphs one (1) through four (4) hereof shall submit their reports in writing to the Planning Commission and applicant.

d. The Zoning Administrator formally acknowledges filing and receipt of a complete application and sets a public hearing.

e. The same notification procedure for this hearing shall be followed as was followed with respect to the applicant's Concept Plan, outlined in Section 401.06.C.

f. The Planning Commission holds a public hearing.

g. The petitioner and/or their representative shall appear before the Planning Commission at the hearing to answer questions regarding the proposed project.

h. The Planning Commission makes a recommendation to the City Council on the General Plan of Development.

13 i. The City Council reviews all recommendations and approves/denies the application(s). Approval of a general plan of development shall require passage by a majority vote of the City Council. A general plan of development that includes changing all or part of the existing classification of a zoning district from residential to PUD where the general plan of

development includes commercial or industrial uses requires a four-fifths (4/5) majority vote of the City Council. The approval of a general plan of development shall constitute the approval of a planned unit development permit.

[13] j. Pursuant to Minnesota Statutes 15.99, an application for a general plan of development shall be approved or denied within sixty (60) days from the date of its official and complete submission, unless extended by the City pursuant to statute or a time waiver is granted by the applicant.

k. The Zoning Administrator shall instruct the City Attorney to draw up a PUD Agreement which stipulates the specific terms and conditions approved by the City Council and accepted by the applicant. This Agreement shall be signed by the Mayor of the City of Oak Park Heights, City Administrator and the applicant within thirty (30) days of Council approval of the General Plan of Development Stage. Where the General Plan of Development is to be resubmitted or denied approval, Council action shall be by written report setting forth the reasons for its action. In all cases, a certified copy of the document evidencing Council action shall be promptly delivered to the applicant by the Zoning Administrator.

l. At any time following the approval of a General Plan of Development by the City Council, the applicant may, pursuant to the applicable ordinances of the City apply for, and the Zoning Administrator may issue, grading permits for the area within the PUD for which General Plan of Development approval has been given.

5. **Information Requirements.** The General Plan of Development should depict and outline the proposed implementations of the General Concept Plan stage for the PUD. Information from the General Concept may be included for background and to provide a basis for the submitted plan. The General Plan of Development submissions shall include but not be limited to:

a. Present and possible new zoning classifications required for development stage submission and any other public decisions necessary for implementation of the proposed plan.

b. Ten (10) sets of preliminary plans, drawn to a scale of not less than one (1) inch equals one hundred (100) feet (or scale requested by the City Administrator) containing at least the following information:

1) Proposed name of the development (which shall not duplicate nor be similar in pronunciation to the name of any plat in Oak Park Heights).

2) Property boundary lines and dimensions of the property and any significant topographical or physical features of the property.

3) The location, size, use and arrangement, including height in stories and feet and total square feet of ground area coverage and floor area, of proposed buildings, including model homes, and existing buildings which will remain, if any. Also all required setback lines shall be depicted.

4) Location, dimensions of all driveways, entrances, curb cuts, parking stalls, loading spaces and access aisles, and all other circulation elements including bike and pedestrian; and the total site coverage of all circulation elements.

5) Location, designation and total area of all common private open space and facilities.

6) Location, designation and total area proposed to be conveyed or dedicated for public open space, including parks, playgrounds, school sites and recreational facilities.

7) Proposed lots and blocks, if any, and numbering system.

8) The location, use and size of structures and other land uses on adjacent properties.

9) A detailed, drawn to scale, landscape plan and planting specifications showing the areas to be sodded and the location, size and species of all trees and shrubbery to be planted.

10) General grading and drainage plans for the developed PUD.

11) A detailed plan illuminating size, location and structural specifications for exterior signing and lighting.

2 12) Any other information that may have been required by the City staff, Planning Commission, or City Council in conjunction with the approval of the General Concept Plan.

c. An accurate legal description of the entire area within the PUD for which final development plan approval is sought.

d. Where applicable, a tabulation indicating the number of residential dwellings units by number of bedrooms and expected population/housing profile.

e. Where applicable, a tabulation indicating the gross square footage, if any, of commercial and industrial floor space by type of activity (e.g. drug store, dry cleaning, supermarket).

f. Preliminary architectural "typical" plans indicating use, floor plan, elevations and exterior wall finishes of proposed building, including model homes.

g. A detailed site plan, suitable for recording, showing the physical layout, design and purpose of all streets, easements, rights-of-way, utility lines and facilities, lots, block, public and common private open space, general landscaping plan, structure, including model homes, and uses.

h. A traffic flow plan and analysis.

i. A solid waste disposal procedures and provisions.

j. Preliminary grading and site alteration plan illustrating changes to existing topography and natural site vegetation. The plan should clearly reflect the site treatment and its conformance with the approved Concept Plan.

k. A preliminary plat prepared in accordance with the Oak Park Heights Subdivision Regulations.

l. An environmental impact analysis and soil erosion control plan acceptable to the Watershed District, Department of Natural Resources, Soil Conservation Service, or any other agency with review authority clearly illustrating erosion control measures to be used during construction and as permanent measures.

m. A statement summarizing all changes, which have been made in any document, plan data or information previously submitted, together with revised copies of such document, plan or data.

2 n. Such other and further information as the City staff, Planning Commission, or Council shall find necessary to a full consideration of the entire proposed PUD or any stage thereof.

2 o. The Planning Commission and City Council may excuse an applicant from submitting any specific item of information or document required in this Section which it finds to be unnecessary to the consideration of the specific proposal for PUD approval.

8 p. All such information shall be provided to be accompanied by three (3) large scale copies and twenty (20) reduced scale (11" x 17") copies of detailed written and graphic materials as identified above, fully explaining the proposed changes, development or use, together with a mailing list provided by the applicant from the records of the Washington County Assessors Office for all homes, businesses and properties located within three hundred fifty (350) feet of the subject property.

401.06.E. Final Plan.

1. **Purpose.** The Final Plan is to serve as a complete, thorough and permanent public record of the PUD and the manner in which it is to be developed. It shall incorporate all prior approved plans and all approved modifications thereof resulting from the PUD process. It shall serve in conjunction with other City ordinances as the land use regulation applicable to the PUD.

2. **Submission of Final Plan.** After approval of a General Concept Plan for the PUD and approval of a Development Stage Plan for a section of the proposed PUD, the applicant will submit the following material for review by the City staff prior to issuance of a building permit.

   a. A detailed landscaping plan and statement of specifications.

   b. Proof of recording any easements and restrictive covenants prior to sale of any land or dwelling unit within the PUD and of the establishment and activation of any entity that is to be responsible for the management and maintenance of any public or common open space or service facility.

   c. All certificates, seals and signatures required for the dedication of land and recording of documents.

   d. Final architectural working drawings of all structures.

   e. A final plat and final engineering plans and specifications for streets, utilities and other public improvements, together with a Community/Development Agreement for the installation of such improvements and financial guarantees for the completion of such improvements.

   f. Any other plan, agreements or specifications necessary for the City staff to review the proposed construction. All work must be in conformance with the Minnesota State Uniform Building Code.

3. **Recording of Final Plan.** Within ten (10) days of its approval, the applicant shall cause the Final Plan, or such portions thereof as are appropriate, to be recorded with the County Recorder.

4. **Building and Other Permits.** Except as otherwise expressly provided herein, upon receiving notice from the City Administrator that the approved Final Plan has been recorded and upon application of the applicant pursuant to the applicable ordinances of the City, the City may issue building and other permits to the applicants for development, construction and other work in the area encompassed b the approved Final Plan provided, however, that no such permit shall be issued unless all requirements of all codes and ordinances which are applicable to the permit sought, have been satisfied and required performance bonds submitted.

5. **Limitation on Final Plan Approval.** Within one year after the approval of a Final Plan for PUD, or such shorter time as may be established by the approved development schedule, construction shall commence in accordance with such approved plan. Failure to commence construction within such period shall, unless an extension shall have been granted as hereinafter provided, automatically render void the PUD permit and all approvals of the PUD plan and the area encompassed within the PUD shall thereafter be subject to those provisions of the zoning ordinances, and other ordinances, applicable in the district in which it is located. In such cases, the Council shall forthwith adopt an ordinance repealing the PUD permit and all PUD approvals and re-establishing the zoning and other ordinance provisions that would otherwise be applicable.

   The time limit established by this paragraph may, at the discretion of the Council, be extended for not more than one year by ordinance or resolution duly adopted.

6. **Inspections During Development.**

   a. **Compliance with Overall Plan.** Following Final Plan approval of a PUD, or a stage thereof, the Building Official shall, at least annually until the completion of development, review all permits issued and construction undertaken and compare actual development with the approved plans for development and with the approved development schedule.

      If the Building Official finds that development is not proceeding in accordance with the approved schedule, or that it fails in any other respect to comply with the PUD plans as finally approved, he/she shall immediately notify the Council. Within thirty (30) days of such notice, the Council shall either by ordinance revoke the PUD permit, and the land shall thereafter be governed by the regulations applicable in the district in which it is located; or shall take such steps as it shall deem necessary to compel compliance with the Final Plans as approved; or shall require the landowner or applicant to seek an amendment of the Final Plan.

   b. **Compliance with Construction Plans and Drawings.** All improvements to be constructed or erected shall be subject to inspection by the City Building Official. The cost attributable to all inspection required by this subparagraph shall be charged to and paid by the owner or applicant. Before any required inspections take place, the owner or applicant may be required to post a deposit with the City Clerk to cover the cost of such inspections. The owner or applicant shall give at least twenty-four (24) hours written notification to the City Building Official prior to the performance of any of the following work:

      1) The surfacing of any roadway or street.

      2) The installation of any curbing or gutters.

3) The grading or backfilling or any open trench or excavation in which any utility facilities, including but not limited to, water lines, sewer lines, gas lines and electrical cables, shall have been installed.

If, upon inspection, in the opinion of the City Building Official, any work does not comply with the approved construction plans and drawings or the approved Final Plan, the City Building Official shall have authority to order that all such work shall be terminated until such time as necessary steps are taken to correct any defects or deficiencies, the owner or applicant shall notify the City Building Official and request a re-inspection.

Upon completion of all required improvements within the area covered by the approved Final Plan, the owner or applicant shall notify the City Building Official who shall thereupon conduct a final inspection of all improvements as installed from the approved Construction Plan and drawings or approved Final Plan, which defects will, in the opinion of the City Building Inspector, adversely affect the performance, suitability, or desirability of said improvements, the Building Inspector shall notify the applicant in writing of such defects, deficiencies or deviations and the owner or applicant shall, at their sole cost and expense, correct such defects or deviations within six (6) months of the date of notification. When such defects, deficiencies or deviations have been corrected, the owner or applicant shall notify the City Building Official that the improvements are again ready for final inspection.

If a final inspection indicates that all improvements as installed contain no defects, deficiencies or deviations, then within ten (10) days from the completion of such inspection, the City Building Official shall certify to the Council that all improvements have been installed in conformity with the construction plans and drawings and the Final Plan. Following certification of all improvements by the City Building Official, the applicant shall have prepared and submitted to the City, three (3) sets of “as-built drawings” of all improvements. The Council shall thereupon by resolution formally accept such improvements at which time they shall become the property of the City of Oak Park Heights.

401.06.F. PUD Progress Evaluation. If periodic review of a PUD project is included as a condition to the approval of a PUD permit, such a project shall be reviewed by the City Council. The Council may at its discretion call a public hearing as part of its review. Notice of such hearing shall be given in the same manner as outlined in Section 401.06.C for review of a Concept Plan.

401.06.G. Amendment of a PUD Permit.

1. **Application Procedures.** Any deviation or modification from the terms or conditions of an approved PUD permit or any alteration in a project for which a PUD permit has been approved shall require an amendment of the original permit. An application for amendment of the original PUD permit specifying the proposed variance or alteration shall be submitted to the City, together with a fee as outlined in Section 401.08 and such information as is required by the City or as the applicant deems necessary to fully explain the application. Should the applicant request an amendment of a PUD permit to erect an additional building or buildings, the applicant fee therefore shall be established as outlined in Section 401.08. In either case, the applicant also shall pay, as an additional fee, any consulting expenses which are incurred by the City in review of the application. The same application and hearing procedure for an amendment of a PUD permit shall be followed as was followed with respect to the applicant's Concept Plan, as outlined in Section 401.06.C.

[2, 13]2. **Action by the Planning Commission and City Council.** The same review procedure, except for voting requirements, shall be followed for an amendment of a PUD permit as was followed for the concept plan, outlined in Section 401.06.C. The Planning Commission shall make a recommendation to the City Council on a request for an amendment of a PUD permit. Approval of an amendment of a PUD permit shall require a four-fifths (4/5) vote of the City Council.

401.06.H. General Requirements.

1. **Records.** The Zoning Administrator shall maintain a record of all PUD permits issued by the City, including information on a project's permitted uses, all pertinent project plans, any conditions imposed on a project by the City Council, and such other information as the Zoning Administrator may deem appropriate.

2. **Withdrawal of an Application.** Any application under this Section may be withdrawn by an applicant without prejudice at any time prior to final City Council action thereon.

3. **Resubmission of an Application.** Once an application for a PUD permit has been denied by the City Council, that application may not be resubmitted for a period of six (6) months from the date of such denial.

4. **Cancellation of a PUD Permit.** Physical implementation of any approved PUD project must begin within twelve (12) months following City Council approval of the PUD permit for that project, unless in granting such a permit the Council shall specify a different period of time for project implementation. Failure to initiate project implementation within the appropriate time period automatically shall cancel the PUD permit for a project unless an extension of said permit is approved by the Council prior to the date of cancellation. An application for extension of a PUD

permit shall be administered in the same manner as outlined in Section 401.03.C.4 of this Ordinance for extension of a conditional use permit. An existing PUD permit also shall be canceled if any rezoning or other action by the City shall occur which supersedes the permit.

5. **Qualifications of an Applicant.** Any application under this Section shall be made only by the owner of the property covered in the application or by duly authorized representative, provided, however, that an option-holder or a contract-holder also may submit such an application if it is accomplished by a fully executed agreement or document from the property owner stating that there are no objections to the proposed project and that the applicant is in fact joining in said application as his/her interest may appear.

6. **Financial Security to Assure Compliance.** In order to insure that all improvements contained in a General Plan of Development are completed in accordance with said Plan and to insure that an applicant fully complies with all conditions of a PUD permit, the applicant may be required to post a corporate surety bond, cash bond or letter of credit guaranteeing the faithful performance of such work and compliance with such conditions. Such security shall be in a form satisfactory to the City, shall be in an amount established by the City Council, and shall cover each segment of each phase of a PUD project as outlined in the General Plan of Development. However, the amount of said security may be reduced or a portion of said bond may be released as specific segments of each phase of development have been completed, upon approval by the City Council.

7. **Platting of a PUD Project.** In the event that any approved PUD project is to be subdivided into lots or parcels for the purpose of separate ownership, such a project first shall be platted under the platting procedures of the City and Washington County in effect at that time. The plat shall be processed according to standards contained in the Oak Park Heights Subdivision Regulations and in conjunction within the General Plan of Development as outlined in Section 401.06.D.

8. **Conveyance of Property Within a PUD Project.** In the event that any real property within an approved PUD project is conveyed in total or in part, the buyer(s) thereof shall be bound by all provisions of the PUD permit and the General Plan of Development for that project. However, nothing in this Ordinance shall be construed as to make such conveyed property non-conforming with regard to normal zoning standards as long as the conveyed property conforms with the approved PUD permit and the General Plan of Development for a project.

401.07. ADMINISTRATION AND ENFORCEMENT

401.07.A. Administrating Officer. This Ordinance shall be administered by the City's designated representative, who shall be appointed by the City Council and referred to as the Zoning Administrator.

401.07.B. Duties of the Administrative Officer. The Zoning Administrator shall enforce this Ordinance through the proper legal channels and in addition therefore and in furtherance of said authority shall:

1. Examine all building permit applications to determine their compliance with this Ordinance, and approve the same when such compliance is established.

2. Issue certificates of occupancy for any use, structure, or building after determinations of above.

3. Maintain permanent and current records of this Ordinance, including but not limited to, all maps, amendments, conditional uses, variances, PUD permits, non conforming uses, notices of violations and enforcement orders appeals and applications therefore.

4. Institute in the name of the City of Oak Park Heights any appropriate actions or proceedings against a violator as provided by law.

5. Periodically or upon request, inspect buildings, structures and uses of property within the City determine their compliance with this Ordinance. With regard to performance standards, the Zoning Administrator may employ the services of professional experts to determine such compliance. The cost of such services shall be paid by the property owner if a violation of this Ordinance is established; otherwise such costs shall be paid by the City.

6. Notify in writing any person responsible for violating any provision of this Ordinance, indicating the nature of the violation and ordering the action necessary to correct it.

7. Order discontinuance of the illegal use of land, buildings or structures; order the removal of illegal buildings, structures, additions or alterations; order discontinuances of illegal construction in progress; and take any other action necessary to insure compliance with or to prevent violation of this Ordinance.

8. Upon request, provide information relative to a property to any person having a proprietary or tenancy interest in that property.

401.08. ADMINISTRATION - FEES

401.08.A. Base Fees. To defray administrative costs of processing of requests for conditional uses, amendments, variances or appeals a base fee as set by resolution of the City Council per application shall be paid by all applicants.

401.08.B. Development Application Costs. In order to defray the additional cost of processing applications (amendments, conditional use, variance, appeal, planned unit development) for developments, the City shall have the option of assessing all applicants the total cost of staff and/or consulting time spent exclusively in producing materials for the applicant's request, and all materials for said request.

1. "Materials" shall include, but not be limited to, maps, graphs, charts, drawings, etc. and all printing or reproduction of same.

2. "Staff and/or Consulting Time" shall include any time spent in either researching for or actual production of materials.

3. The hourly rate for "staff and/or consulting time" shall be established and made available to the applicant by the City Administrator prior to production of any materials and the applicant shall be given a reasonable estimate of project time and/or materials costs.

401.08.C. Payment Schedule. Fees shall be payable at the time applications are filed with the City Administrator and are not refundable unless application is withdrawn prior to referral to the City Council. A deposit to cover staff or consulting time and special materials will be established and required by the City Administrator at the time the base fee is paid.

[5, 16] **401.08.D. Development Review.** In all R-3, R-B, B-1, B-2, B-3, B-4, B-W, I and River Impact District zones, all applications for building permits relating to multiple family housing, industrial, commercial or retail uses of property within those zones shall first be referred to the City Planner to determine zoning code compliance prior to review of the proposed development by the building inspector and prior to issuance of a building permit. All expenses incurred by the City in reviewing applications for industrial, commercial or retail buildings or uses within those zones shall be paid by the applicant to the City. The City Council may, by resolution, from time to time implement a procedure affecting the payment of such expenses to the City of Oak Park Heights by all such applicants.

401.09. VIOLATIONS AND PENALTIES

401.09.A. Administration and Enforcement. Any person, firm or corporation who violates, disobeys, omits, neglects or refuses to comply with, or resists enforcement of any of the provisions of this Ordinance as amended shall, upon conviction thereof, be fined or penalized not more than the maximum levels established by the State of Minnesota for misdemeanors offenses. Each day that a violation is permitted to exist shall constitute a separate offense.

401.10. CERTIFICATE OF OCCUPANCY

401.10.A. Administration and Enforcement. The Building Official of the City shall not issue a building permit or Certificate of Occupancy as to any property, building or structure where the use thereof by the applicant requires a conditional use permit or variance pursuant to 401.01 et. seq. of the Code of Ordinances of the City of Oak Park Heights, until directed to issue the same by the City Council.

401.10.B. Penalties, Violation and Enforcement. The City Council may, from time to time, by resolution, impose reasonable fees for the inspection of buildings, property or structures to assure compliance with the terms and provisions of the conditional use permits and/or variances which have been applied for and obtained from the City.

401.11 - 401.14. RESERVED

401.15. GENERAL PROVISIONS

401.15.A. Non-Conforming Buildings, Structures, Uses and Lots.

1. **Purpose.** It is the purpose of this section to provide for the regulation of non-conforming buildings, structures and uses and to specify those requirements, circumstances and conditions under which non-conforming buildings, structures and uses will be operated and maintained. The Zoning Ordinance establishes separate districts, each of which is an appropriate area for the location of uses which are permitted in that district. It is necessary and consistent with the establishment of these districts that non-conforming buildings, structures and uses not be permitted to continue without restriction. Furthermore, it is the intent of this section that all non-conforming uses shall be eventually brought into conformity.

2. **Continued Non-Conformity.** Any structure or use lawfully existing upon the effective date of this Ordinance shall not be enlarged, but may be continued at the size and in the manner of operation existing upon such date except as hereinafter specified or, subsequently amended.

3. **Repairing.** Nothing in this Ordinance shall prevent the placing of a structure in safe condition when said structure is declared unsafe by the Building Inspector providing the necessary repairs shall not constitute more than fifty (50) percent of fair market value of such structure. Said value shall be determined by the City Assessor.

4. **Moving.** No non-conforming building, structure or use shall be moved to another lot or to any other part of the parcel of land upon which the same was constructed or was conducted at the time of this Ordinance adoption unless such movement shall bring the non-conforming into compliance with the requirements of this Ordinance.

5. **Changing Uses.** When any lawful non-conforming use of any structure or land in any district has been changed to a conforming use, it shall not thereafter be changed to any non-conforming use.

6. **Changing Use to Lessen a Non-Conformity.** A lawful non-conforming use of a structure or parcel of land may be changed to lessen the non-conformity of use. Once a non-conforming structure or parcel of land has been changed, it shall not thereafter be so altered to increase the non-conformity.

15 7. **Destroyed Non-Conforming Use.** If at any time a non-conforming building, structure or use shall be destroyed to the extent of more than fifty (50) percent of its fair market value, said value to be determined by the City, then without further action by the City Council, the building and the land on which such building was located or maintained shall, from and after the date of said destruction, be subject to all the regulations specified by these zoning regulations for the district in which such land and buildings are located, unless a building permit has been applied for

within one hundred eighty (180) days to restore the building to its original condition. Any building which is damaged to an extent of less than fifty (50) percent of its value may be restored to its former extent if it is reconstructed within twelve (12) months after the date of said damage. Estimate of the extent of damage or destruction shall be made by the Building Official.

[15] 8. **Discontinuing Use.** Whenever a lawful non-conforming use of a structure or land is discontinued for a period of one (1) year, following written notice from an authorized agent of the City, any future use of said structure or land shall be made to conform with the provisions of this Ordinance.

[15] 9. **Alterations.** Alterations and normal maintenance to a lawful non-conforming building or structure may be made as provided:

a. The alterations do not expand the building size except as hereinafter provided in Section 401.15.A.10.

b. The alterations do not change the building occupancy capacity or parking demand except as hereinafter provided in Section 401.15.A.10.

c. The alteration does not increase the non-conformity of the building or the use.

10. **Expansion.**

a. Administrative Approvals. The expansions of lawful non-conforming single family or two family residential buildings and structures may be approved by the Zoning Administrator. The Zoning Administrator shall make a determination that the building expansion will have no external negative impacts upon adjacent properties or public rights-of-way.

1) Expansion of buildings found to be non-conforming only by reason of height, yard setback, lot area or off-street parking may be permitted provided the structural non-conformity is not increased and the expansion complies with the performance standards of this Ordinance.

2) Lawful non-conforming single family and two family units may be expanded to improve the livability provided the non-conformity of the structure is not increased.

b. Conditional Use Permit. Lawful non-conforming commercial, industrial, public, semi-public and multiple family structures may be expanded on the same lot by conditional use permit in accordance with Section 401.03 of this Ordinance.

1) Expansion of building found to be non-conforming only by reason of height and setback are exempt from requiring a conditional use permit and may be approved by the Zoning Administrator.

2) Except for the above, the expansion will not increase the non-conformity of the building or site.

3) The new building expansion will conform with all applicable performance standards of this Ordinance. A conditional use permit shall not be issued under this section for a deviation from other requirements of this Ordinance unless variances are also approved.

4) The request for conditional use permit shall be evaluated based on standards and criteria set forth in Section 401.03.A.7 of this Ordinance.

[15] 11. **Constructing a Non-Conforming Use.** Any proposed structure which will, under this Ordinance, become non-conforming but for which a building permit has been lawfully granted prior to the effective date of this Ordinance, may be completed in accordance with the approved plans; provided construction is started within sixty (60) days of the effective date of this Ordinance, is not abandoned for a period of more than one hundred twenty (120) days, and continues to completion within two (2) years. Such structure and use shall thereafter be a legally non-conforming structure and use.

12. **Junk Yard.** No junk yard may continue as a non-conforming use for more than one (1) year after the effective date of this Ordinance, except that a junkyard may continue as a non-conforming use in an industrial district if within that period it is completely enclosed within a building, fence, screen planting, or other device of such height as to screen completely the operation of the junk yard. Plans for such a building or device shall be approved by the City Council before it is erected or put into place.

13. **Legal Non-Conforming Lots.**

a. Vacant or Redeveloped Residential Lots.

1) A lot of record existing as of the effective date of this Ordinance in a residential district, which does not meet the requirements of this Ordinance as to area or width, may be utilized for single family detached dwelling purposes provided that in all residential districts, the measurements of such lot=s area and frontage width are within seventy (70) percent of the requirements of the respective district, as established by this Ordinance.

2) The preceding sub-section 1) is not intended to permit a reduction in setbacks or required yards.

3) In the event that the measurements of such lot=s area and width do not comply with sub-section 1) above, then approval for the construction of a single family dwelling may be requested as a conditional use permit, subject as regulated by Section 401.03 of this Ordinance.

b. Developed Lots. An existing conforming use on a lot or substandard size may be expanded or enlarged if such expansion or enlargement meets all other provisions of this Ordinance.

14. **Hazardous Non-Conformities.** Non-conforming buildings, structures, and/or uses which, based upon documented study and evidence, pose a danger and/or threat to the health, safety, and general welfare of the community, shall:

a. Be legally declared a nuisance by the City.

b. Upon being identified by the City and upon the owner being notified in writing by the City, the owner shall provide to the City a documented time schedule and program with rationale to support the proposed amortization of the building, structure, or use investments which will result in the termination or correction of the non-conformity.

1) The termination/correction time schedule shall be based upon, but not limited to, factors such as the initial investment and the degree of threat or danger being posed.

2) The acceptability of the time schedule shall be determined by the Zoning Administrator with right of appeal.

3) In no case shall a time schedule exceed five (5) years.

401.15.B. General Building and Performance Requirements.

1. **Purpose.** The purpose of this section of the Zoning Ordinance is to establish general development performance standards. These standards are intended and designed to assure compatibility of uses; to prevent urban blight, deterioration and decay; and to enhance the health, safety and general welfare of the residents of the community.

2. **Dwelling Unit Restriction.**

a. No cellar, basement, garage, tent or accessory building shall at any time be used as an independent residence or dwelling unit, temporarily or permanently.

b. Basements may be used as living quarters or rooms as a portion of the principal residential dwelling.

c. Tents, playhouses or similar structures may be used for play or recreational purposes.

3. **Survey and Site Plan Requirement.** Any person desiring to improve property shall submit to the Building Official a registered survey and site plan of said premises and information on the location and dimensions of existing and proposed buildings, location of easements crossing the property, encroachments, and any other information which may be necessary to insure conformance to City ordinances.

4. **Lot Provisions.**

a. All buildings shall be so placed so that they will not obstruct future streets which may be constructed by the City in conformity with existing streets and according to the system and standards employed by the City.

b. Except in the case of planned unit development as provided for in Section 401.06 of this Ordinance, not more than one (1) principal structure shall be located on a lot.

c. On a through lot (a lot fronting on two (2) parallel streets), both street lines shall be front lot lines for applying the yard and parking setback regulations of this Ordinance. In addition, no home on a through lot or corner lot in any residential zone shall maintain direct access to any arterial street designated as such by the Comprehensive Plan.

d. When a development is proposed which is to be located on two (2) or more lots, and such lots are required to meet the minimum district area and frontage requirement and/or are required to accommodate the use, the lots shall be combined in accordance with the City's Subdivision Ordinance, prior to the issuing of a building permit.

e. When two (2) or more lots are located in the same district, one or more of which lack adequate area or dimensions to qualify for use under the current Ordinance requirements and contiguous and held in one ownership, they shall be combined for use in order to meet the lot requirements by subdividing the property in accordance with the Subdivision Ordinance.

f. No division of a parcel shall be made which leaves remaining any lot with frontage or area below the requirements stated in this Ordinance.

5. **Grading and Drainage.**

a. No land shall be developed and no use shall be permitted that results in water runoff causing flooding, erosion, or deposit of minerals on adjacent properties. Such runoff shall be properly channeled into a storm drain, water course, ponding area, or other public facilities subject to the review and approval of the City Engineer.

11 b. In the case of all residential subdivisions, multiple family, public, institutional, and business developments, the grading and drainage plans shall be submitted to the City Engineer for review and the final drainage plan shall be subject to the Engineer's written approval. In the case of such uses, no modification in grade and drainage flow through fill, erection of retaining walls or other such actions shall be allowed until such plans have been reviewed and received written approval from the City Engineer.

c. Except for written authorization of the City Engineer, the top of the foundation and garage floor of all structures shall be a minimum of eighteen (18) inches above the top of the curb of the abutting street upon which the property fronts and the driveway shall have a slope of not more than ten (10) percent.

d. Modifications which serve to alter the average and typical natural grade of an individual lot more than two (2) feet shall require the approval of the City Council.

6. **Traffic Sight Visibility Triangle.** Except for a governmental agency for the purpose of screening, no wall, fence, structure, tree, shrub, vegetation or other obstruction shall be placed on or extend into any yard or right-of-way so as to pose a danger to traffic by obscuring the view of approaching vehicular traffic or pedestrians from any street or driveway. Visibility from any street or driveway shall be unobstructed between the height of three (3) feet and six (6) feet, measured from where both street, driveway, or railway center lines intersect within the triangle describes as beginning at the intersection of the projected curb line of two (2) intersecting streets or drives, thence thirty (30) feet along one curb line, thence diagonally to a point thirty (3) feet from the point of beginning along the other curb line (see attached drawing). The exception to this requirement shall be where there is a street, planting or landscape arrangement within such area that will not create a total obstruction wider than two (2) feet. These requirements shall not apply to conditions that legally exist prior to the effective date of this Ordinance unless such conditions are determined to constitute a safety hazard by the Zoning Administrator.

[1] 7. **Outdoor Lighting.**

a. Purpose. It is the purpose of this Ordinance section to encourage the use of lighting systems that will reduce light pollution and promote energy conservation while increasing night time safety, utility, security and productivity.

b. Exemptions. The provisions of this section shall not apply to the following:

1) This section does not prohibit the use of temporary outdoor lighting used during customary holiday seasons.

2) This section does not prohibit the use of temporary outdoor lighting used for civic celebrations and promotions.

3) Lighting required by a government agency for the safe operation of airplanes, or security lighting required on government buildings or structures.

4) Emergency lighting by police, fire and rescue authorities.

c. Non-Conforming Uses.

1) All outdoor lighting fixtures existing and legally installed prior to the effective date of this Ordinance (15 October 1997) are exempt from regulations of this section but shall comply with the previous Ordinance requirements for glare as follows:

a) Any lighting used to illuminate an off-street parking area, sign or other structure, shall be arranged as to deflect light away from any adjoining residential zone or from the public streets. Direct or sky-reflected glare, where from flood lights or from high temperature processes such as combustion or welding shall not be directed into any adjoining property. The source of lights shall be hooded or controlled in some manner so as not to light adjacent property. Bare incandescent light bulbs shall not be permitted in view of adjacent property or public right-of-way. Any light or combination of lights which cast light on a public street shall not exceed one (1) foot candle (meter reading) as measured from the center line of said street. Any light or combination of lights which cast light on residential property shall not exceed four-tenths (.4) foot candles (meter reading) as measured from said property.

2) New Fixtures. Whenever a light fixture that was existing on the effective date of this Ordinance (15 October 1997) is replaced by a new outdoor light fixture, the provisions of this section shall be complied with.

d. Intensity. No light source or combination thereof which cast light on a public street shall exceed one (1) foot candle meter reading as measured from the centerline of said street nor shall any light source or combination thereof which cast light on adjacent property exceed four-tenths (0.4) foot candles as measured at the property line, per the method outlined in Section 401.15.B.7.e.

e. Method of Measuring Light Intensity. The foot candle level of a light source shall be taken after dark with the light meter held six (6) inches above the ground with the meter facing the light source. A reading shall be taken with the light source on, then with the light source off. The difference between the two readings will be identified as the light intensity.

f. Performance Standards

1) Residential/Open Space District Standards. In all residential/open space districts, any lighting used to illuminate an off-street parking area, structure, or area shall be arranged as to deflect light away from any adjoining residential property or from any public right-of-way in accordance with the following provisions:

a) The light source shall be hooded or controlled so as not to light adjacent property in excess of the maximum intensity defined in Section 401.15.B.7.d.

b) Bare light bulbs shall not be permitted in view of adjacent property or public right-of-way, unless part of a permanent fixture.

11 2) Public/Institutional, Commercial and Industrial Districts. Any lighting used to illuminate an off-street parking area, structure, or area shall be arranged so as to deflect light away from any adjoining property or from any public right-of-way in accordance with the following provisions:

a) Shielding. The luminaire shall contain a cutoff which directs and cuts off the light at an angle of ninety (90) degrees or less.

b) Intensity. Light sources shall not be permitted so as to light adjacent property in excess of the maximum intensity defined in Section 401.15.B.7.d.

c) Exceptions. Architectural/historical light fixtures that feature globes that are not shielded, or lighting of entire facades or architectural features of a building shall be approved by the City Council. In no case shall the light affect adjacent property in excess of the maximum intensity defined in Section 401.15.B.7.d.

d) Height. The maximum height above the ground grade permitted for light sources mounted on a pole is twenty-five (25) feet. A light source mounted on a building shall not exceed the height of the building. In no case shall the height of a light source mounted on a pole or on a building exceed the height limits of the zoning district in which the use is located unless allowed by conditional use permit.

e) Location.

(1) The light source of an outdoor light fixture shall be setback a minimum of ten (10) feet from a street right-of-way and five (5) feet from an interior side or rear lot line.

(2) No light sources shall be located on the roof unless said light enhances the architectural features of the building and is approved by the Zoning Administrator.

f) Hours.

(1) The use of outdoor lighting for parking lots serving commercial and industrial businesses shall be turned off one (1) hour after closing, except for approved security lighting.

(2) All illuminated on-premise and off-premise signs for advertising purposes shall be turned off between 11:00 PM and sunrise except that said signs may be illuminated while the business facility on the premise is open for service.

g) Glare. Direct or reflected glare from high temperature processes such as combustion or welding shall not be visible from any adjoining property.

3) Outdoor Recreation. Outdoor recreational uses such as, but not limited to, baseball fields, football fields, tennis courts and snow skiing areas have special requirements for night time lighting. Due to these unique circumstances, a conditional use permit shall be required for outdoor lighting systems which do not comply regulations of this section.

a) No outdoor recreation facility whether public or private shall be illuminated after 11:00 PM.

b) Off-street parking areas for outdoor recreation uses which are illuminated shall meet the requirements stated for commercial and industrial applications as found in Section 401.15.B.7.f.2).a., b., c., e., and g.

c) The provisions for a conditional use permit, Section 401.03.A.8 of this Ordinance, are considered and satisfactorily met.

[12] 4) Outdoor Signs. All lighting of signing and informational or visual communication devices shall be in compliance with Section 401.15.G of this Ordinance.

g. Prohibitions. The following outdoor lights are prohibited within the City of Oak Park Heights:

1) The use of search lights for any business shall be limited to not more than four (4) events per calendar year. During any one event, the use of search lights shall be limited to five (5) days consecutively and shall not be used between the hours of 10:30 PM and sunrise.

2) Flashing lights.

h. Submission of Plans. All applications, except single family residential, that include outdoor lighting must include evidence the proposed outdoor lighting will comply with this section. The application shall contain the following information, in addition to other required information:

1) Site plans indicating the location on the premises of all illuminating devices, fixtures, lamps, supports, reflectors and other lighting devices.

2) Description of the type of illuminating devices, fixtures, lamps, supports, reflectors and other lighting devices. The description may include, but is not limited to, catalog cuts by manufacturers and drawings (including sections where required).

3) Photometric plans illustrating the angle of the cutoff or light emissions, and illumination field of the proposed site lighting.

8. **Smoke.** The emission of smoke by any use shall be in compliance with and regulated by the State of Minnesota Pollution Control Standards, Minnesota Regulation ACP 7005, as may be amended.

9. **Dust and Other Particulated Matter.** The emission of dust, fly ash or other particulated matter by any use shall be in compliance with and regulated by the State of Minnesota Pollution Control Standards, Minnesota Regulation APC 7005, as may be amended.

10. **Odors.** The emission of odor by any use shall be in compliance with and regulated by the State of Minnesota Pollution Control Standards, Minnesota Regulation APC 7005, as may be amended.

11. **Noise.** The emission of noise by any use shall be in compliance with and regulated by the State of Minnesota Pollution Control Standards, Minnesota Regulation NPC 7010, as may be amended.

12. **Vehicles.** Passenger automobiles, station wagons and trucks not currently licensed by the State, or which are, because of mechanical deficiency, incapable of movement under their own power, parked or stored outside for a period in excess of thirty (30) days, and all materials stored outside in violation of the City Ordinance are considered refuse or junk and shall be disposed of.

13. **Refuse.** Any accumulation of refuse on any premises not stored in containers which comply with City Code, or any accumulation of refuse including car parts on any premises which has remained thereon for more than one (1) week is hereby declared to be a nuisance and may be abated by order of the City Administrator, as provided by Minnesota Statutes and the cost of abatement may be assessed on the property where the nuisance was found, as provided by law.

14. **Exterior Storage.** All materials and equipment except as provided below and in Sections 401.21 through 401.34 of this Ordinance shall be stored within a building or fully screened so as not to be visible from adjoining properties and the public right-of-way except for the following:

    a. Clothes line poles or wires.

    b. Not more than a total of two (2) recreational vehicles and/or pieces of equipment (not including racing cars).

    c. Construction and landscaping materials currently being used on the premises.

    d. On and off-street parking of currently registered and operable passenger vehicles and trucks not to exceed a gross weight of twelve thousand (12,000) pounds.

    e. Lawn furniture or furniture used and constructed explicitly for outdoor use.

    f. All firewood stored on residential premises shall be stored in the side yard or rear yard and stacked neatly.

15. **Waste Material.** Waste material resulting from or used in industrial or commercial manufacturing, fabricating, servicing, processing or trimming shall not be washed into the public storm sewer system nor the sanitary sewer system or any public water body, but shall be disposed of in a manner approved by the Minnesota State Fire Marshal, the Pollution Control Agency, and the Department of Natural Resources.

16. **Bulk Storage (Liquid).** All uses associated with the bulk storage of all gasoline, liquid fertilizer, chemical, flammable and similar liquids shall comply with requirements of the Minnesota State Fire Marshal's and Minnesota Department of Agricultural Offices and have documents from those offices stating the use is in compliance.

17. **Radiation Emission.** All activities that emit radioactivity shall comply with the minimum requirements of the Minnesota Pollution Control Agency.

18. **Electrical Emission.** All activities which create electrical emissions shall comply with the minimum requirements of the Federal Communications Commission.

19. **Building Security.** All multiple family buildings shall be provided with security systems subject to comment of the Chief of Police and the Building Official.

20. **Sales in Residential/Commercial Areas.**

    a. **Personal Vehicles.**

        1) Vehicles sold in residential/commercial areas shall be the personal property of the home or business occupant.

        2) Sales of personal vehicles shall be limited to no more than one (1) vehicle per calendar year, unless approved by the Zoning Administrator.

        3) Vehicles for sale shall not be parked in any portion of the public right-of-way, public boulevard, or required front yard except a designated, improved driveway.

        4) For sale signs on or in which vehicles shall be limited to two (2) square feet.

    b. **Garage or Rummage Sales.**

        1) Merchandise offered for sale shall be the personal property of the occupant.

2) Sales shall be limited to a maximum of three (3) consecutive days and occurring no more than three (3) times within one (1) calendar year per property.

3) All goods shall be confined within a building and improved driveway with no display occurring within other portions of the front yard.

4) Signs shall be governed by Section 401.15.G of this Ordinance.

401.15.C. General Yard, Lot Area, and Building Regulations.

1. **Yard Requirements.**

a. Purpose. This section identifies minimum yard spaces and areas to be provided for in each zoning district.

b. No lot, yard or other open space shall be reduced in area or dimension so as to make such lot, yard or open space less than the minimum required by this Ordinance, and if the existing yard or other open space as existing is less than the minimum required, it shall not be further reduced. No required open space provided about any building or structure shall be included as part of any open space required for another structure.

c. Where a commercial or industrial zoning district abuts a residential zoning district, the minimum building setback adjacent to the residential district shall be twenty (20) feet or three-fourths (3/4) of the building height, whichever is greater.

5, 16 d. All setback distances, as listed in the table below, shall be measured from the appropriate lot line.

District	Front Yard	Side Yard	Rear Yard
O	50 feet	30 feet[2)]	50 feet
R-1	30 feet[1)]	10 feet[2)]	30 feet
R-1A	30 feet[1)]	10 feet[2)]	30 feet
R-1B	30 feet[1)]	10 feet[2)]	30 feet
R-1C	30 feet[1)]	15 feet[2)]	30 feet
R-2	30 feet[1)]	10 feet[2)]	30 feet
R-3	30 feet[1)]	20 feet[2)]	30 feet
R-B	30 feet	10 feet[3)]	30 feet
B-1	30 feet	20 feet[3)]	30 feet
B-2	40 feet	10 feet[3)]	20 feet
B-3	40 feet	10 feet[3)]	20 feet
B-4	40 feet	10 feet[3)]	20 feet
B-W	50 feet	20 feet[4)]	20 feet[4)]
I	50 feet	30 feet	40 feet

1) Where adjacent structures within same block have front yard setbacks different from those required, the front yard minimum setback shall be the average of the adjacent structures. If there is only one (1) adjacent structure, the front yard minimum setback shall be the average of the required setback and the setback of adjacent structures.

2) Not less than thirty (30) feet from lot line, if lot is on a corner.

3) Not less than twenty (20) feet from lot line, if lot is on a corner.

4) Not less than fifty (50) feet from a lot if lot abuts a residential zoning district.

e. The following shall not be considered as encroachments on yard setback requirements:

1) Cantilevers chimneys, flues, leaders, sills, pilasters, lintels, ornamental features, cornices, eaves, gutters, and the like, provided they do not project more than two (2) feet into a required yard.

2) Uncovered terraces, steps, decks, uncovered porches, stoops or similar features provided they do not extend more than nine (9) inches above the lowest ground level of the principal structure, or to a

distance less than five (5) feet from a side yard and rear lot lines, or more than five (5) feet into a required front yard. No encroachment shall be permitted in existing or required drainage and utility easements.

3) In rear yards, recreational and laundry drying equipment, arbors and trellises, and air conditioning or heating equipment not exceeding established state noise levels, provided they are set back five (5) feet from side lot lines, eight (8) feet from the rear lot line, and not located within a utility and/or drainage easement, or as permitted in Section 401.35 of the shoreland regulations. No encroachment shall be permitted in existing or required drainage and utility easements.

4) A one story, covered entrance for a detached single family, duplex or townhouse dwelling may extend into the front yard setback not exceeding four (4) feet subject to the approval of a conditional use permit.

5) A required yard on a lot may be reduced by a conditional use permit if the following conditions are met:

a) The reduction of setback requirements is based upon a specific need or circumstance which is unique to the property in question and which, if approved, will not set a precedent which is contrary to the intent of this Ordinance.

b) Property line drainage and utility easements as required by the City's Subdivision Ordinance are provided and no building will occur upon this reserved space.

c) The reduction will work toward the preservation of trees or unique physical features of the lot or area.

d) If affecting a north lot line, the reduction will not restrict sun access from the abutting lots.

e) The reduction will not obstruct traffic visibility, cause a public safety problem and complies with Section 401.15.B.6 of this Ordinance.

[1] f) The conditions of Section 401.03.A.8 of this Ordinance are considered and satisfactorily met.

[5, 16] 2. **Area and Building Size Regulations.** This section identifies minimum area and building size requirements to be provided for in each zoning district as listed in the table below:

District	Lot Area	Lot Width	Building Height
O	5 acres	200 feet	35 feet
R-1	10,400 SF	80 feet	35 feet
R-1A	12,500 SF	85 feet	35 feet
R-1B	15,000 SF	90 feet	35 feet
R-1C	20,000 SF	100 feet	35 feet
R-2	10,400 SF	80 feet	35 feet
R-3	15,000 SF	100 feet	35 feet
R-B	15,000 SF	100 feet	35 feet
B-1	15,000 SF	100 feet	35 feet
B-2	15,000 SF	100 feet	35 feet
B-3	15,000 SF	100 feet	35 feet
B-4	15,000 SF	100 feet	35 feet
B-W	30,000 SF	100 feet	35 feet
I	1 acre	100 feet	45 feet

3. **Lot Area Per Unit.** (The lot area per unit requirement for townhouses, quadraminiums, condominiums and planned unit developments shall be calculated on the basis of the total area in the project and as controlled by an individual and joint ownership.)

Two Family	6,000 square feet
Townhouse, Quadraminium	4,000 square feet
Multiple Family	2,500 square feet*
Elderly Housing	1,000 square feet

* Add 500 square feet for each bedroom over two bedrooms per unit.

4. **Building Height Exceptions.** The building height limits established for each zoning district shall not apply to the following list of items, except that no such structural element may exceed forty-five (45) feet in total height or exceed the maximum height of the building by more than five (5) feet, whichever is greater, except by conditional use permit.

a. Belfries.

b. Chimneys or flues.

c. Church spires.

d. Cooling towers.

e. Cupolas and domes which do not contain useable space.

f. Elevator penthouses.

g. Flag poles.

h. Monuments.

i. Parapet walls extending not more than three (3) feet above the limiting height of the building.

j. Water towers.

k. Poles, towers and other structures for essential services.

l. Necessary mechanical and electrical appurtenances.

5. **Roof Equipment.** No excluded roof equipment or structural element extending beyond the limited height of a building may occupy more than twenty-five (25) percent of the area on such roof nor exceed ten (10) feet in height unless otherwise noted.

6. **Minimum Floor Area Per Dwelling Unit.**

a. Single Family Dwelling Units in R-1 Zoning Districts. Living units classified as single family dwellings shall contain at a minimum, nine hundred sixty (960) square feet of floor area.

b. Other Dwelling Units. Except for elderly housing, all other dwellings shall have the following minimum floor areas per unit:

Efficiency and One Bedroom Units	600 square feet
Two Bedroom Units	720 square feet
More than Two Bedroom Units	An additional 100 square feet for each additional bedroom.

c. Elderly (Senior Citizen) Housing. Living units classified as elderly (senior citizen) housing units shall have the following minimum floor area per unit:

Efficiency Units	440 square feet
One Bedroom	520 square feet

7. **Single Family Dwelling - Building Requirements.** Single family homes within all zoning districts shall:

a. Be constructed upon a continuous perimeter foundation that meets the requirements of the State Uniform Building Code.

b. Not be less than thirty (30) feet in length and not less than twenty-four (24) feet in width over that entire minimum length. Width measurements shall not take account of overhang and other projections beyond the principal walls. Dwellings shall also meet the minimum floor area requirements as set out in this Ordinance.

c. Shall have a minimum roof overhang of one (1) foot.

d. Have an earth covered, composition, shingled or tiled roof.

e. Receive a Building Permit. The application for a building permit in addition to other information required shall indicate the height, size, design and the appearance of all elevations of the proposed building and a description of the construction materials proposed to be used. The exterior architectural design of a proposed dwelling may not be significantly different from the exterior architectural design of any structure or structures already constructed or in the course of construction in the immediate neighborhood, nor significantly different from the character of the surrounding neighborhood as to cause a significant depreciation in the property values of the neighborhood or adversely affect the public health, safety or general welfare.

f. Meet the requirements of the State Uniform Building Code or the applicable Manufactured Housing Code.

[25] 8. **Building Type and Construction.**

a. General Provisions.

[25] 1) Compatibility. Buildings in all zoning districts shall maintain a high standard of architectural and aesthetic compatibility with surrounding properties. Compatibility means that the exterior appearance of the building, including design, architectural style, quality of exterior building materials, and roof type and pitch are complementary with surrounding properties.

[25] 2) Maintenance. All buildings in the City shall be maintained so as not to adversely impact the community's public health, safety, and general welfare or violate the provisions of the Nuisance or Hazardous Building provisions of the Oak Park Heights Code of Ordinances.

[25] 3) Metal Building Finishes. No unfinished steel or unfinished aluminum buildings shall be permitted in any zoning district. High quality, non-corrosive steel, aluminum, or other finished metal shall be allowed for walls or roofs.

[25] 4) Prohibited Materials and Structures.

a. Pole buildings and Quonset structures.

b. Wood or metal poles as principal structure support where such supports are not affixed to a floor slab but inserted directly into the ground to achieve alignment and bearing capacity.

[25,39] 5) Accessory Buildings. All accessory buildings to residential dwelling units and non-residential uses shall be constructed with a design and materials consistent with the general character of the principal structure on the lot as specified in Section 401.15.D of this Ordinance except as allowed for temporary accessory structures specified in Section 401.15.D.11.

[25] b. Exterior Building Finishes – Residential: The primary exterior building façade finishes for residential uses shall consist of materials comparable in grade to the following:

1) Brick.
2) Stone (natural or artificial).
3) Integral colored split face (rock face) concrete block.
4) Wood, natural or composite, provided the surfaces are finished for exterior use or wood of proven exterior durability is used, such as cedar, redwood or cypress.
5) Stucco (natural or artificial).
6) High quality and ecologically sustainable grades of vinyl, steel and aluminum. Vinyl shall be a solid colored plastic siding material.
7) Fiber cement board.
8) Exterior insulation and finish systems.
9) Energy generation panels and devices affixed to a roof or wall. If not in use, the panels or devices should be removed and building surface restored to the original condition.

[25] c. Exterior Building Finishes – Commercial: The exterior architectural elements and finishes for all buildings in the business zoning districts shall be subject to Section 401.16 of this Ordinance known as the Design Guidelines.

[25] d. Single Family and Multiple Family Containing Up to Five (5) Units to Include All New Construction and Remodeling:

1) Entrances. Primary entrances on principal structures shall face the primary abutting public or private street or be linked to that street by a clearly defined and visible walkway or courtyard. Additional secondary entrances may be oriented to a secondary street or parking area. Primary entries shall be clearly visible and identifiable from the street, and delineated with elements such as roof overhangs, recessed entries, landscaping, or similar design features.

2) New Construction and Remodeling. New Construction and remodeling shall relate to the design of surrounding buildings where these are present. Design features such as similar setbacks, scale, façade divisions, roof lines, rhythm and proportions of openings, building materials and colors are possible design techniques, while allowing desirable architecture innovation, variation, and visual interest. All sides of buildings shall use similar quality building materials and other architectural treatments as principal facades.

[25] e. Single Family and Multiple Family Containing Up to Five (5) Units to Include Only New Construction:

1) Window and Door Openings. For principal residential buildings, above grade window and door openings shall comprise at least fifteen (15) percent of the total area of exterior walls (excluding the area of garage doors) facing a public/private street or sidewalk. In addition, for new principal residential buildings, above grade window and door openings shall comprise at least ten (10) percent of the total area of all exterior walls.

2) Garage Doors/Street Facing Building Facade. Public or private street facing garage doors shall be allowed to project no more than four (4) feet from the front or side facades of the ground floor living area portion of the dwelling or a covered porch (measuring at least eight (8) feet by eight (8) feet).

3) Garage Doors/Building Design for Attached or Detached Garages. Garage doors may be located on another side of the dwelling ("side or rear loaded") provided that the side of the garage facing the front public or private street has windows and other architectural details that mimic the features of the living portion of the dwelling.

4) Garage Doors/Building Frontage. Garage doors shall not comprise more than fifty-five (55) percent of the ground floor public or private street facing linear building frontage. Alleys and corner lots are exempt from this standard.

5) Garage Door Height. Except in the rear yard, garage doors facing a public or private street shall be no more than nine (9) feet in height.

[25] f. Multiple Family Containing Six (6) Units or More For New Construction:

1) Mass and Scale

a) Each multiple family building containing six (6) or more dwelling units shall feature a variety of massing proportions, wall plane proportions, roof proportions and other characteristics similar in scale to those of single family detached dwelling units, so that such larger buildings can be aesthetically integrated into a lower density neighborhood. The following specific standards shall also apply to such multiple family dwellings:

(1) Roofs. Each multiple family building will feature a combination of primary and secondary roofs. Primary roofs will be articulated by at least one (1) of the following elements:

(a) Changes in plane and elevation.

(b) Dormers, gables or clerestories.

(c) Transitions to secondary roofs over entrances, garages, porches, bay windows.

(2) Facades and Walls. Each multiple family dwelling shall be articulated with projections, recesses, covered doorways, balconies, covered box or bay windows or other similar features, dividing large facades and walls into human scaled proportions similar to the adjacent single family dwellings, and shall not have repetitive, monotonous, undifferentiated wall planes.

b) Each multiple family building shall feature walls that are articulated by at least two (2) of the following elements within every thirty (30) foot length of the facade:

(1) Recesses, projections or significant offsets in the wall plane of at least four (4) feet.

(2) Distinct individualized entrances with functional porches or patios.

(3) Chimneys made of masonry, or other contrasting material that projects from the wall plan.

(4) Balconies.

(5) Covered bay or box windows.

c) Variation Among Repeated Buildings. For any development containing at least twenty-four (24) and not more than forty-eight (48) dwelling units, there will be at least two (2) distinctly different building designs. For any such development containing more than forty-eight (48) dwelling units, there will be at least three (3) distinctly different building designs. For all developments, there will be no more than two (2) similar buildings placed next to each other along a street or major walkway spine.

d) Distinctly different building designs shall provide significant variation in footprint size and shape, architectural elevations and entrance features, within a coordinated overall theme of roof forms, massing proportions and other characteristics. To meet this standard, such variation shall not consist solely of different combinations of the same building features.

2) Multiple Family Detached Garages:

a) Garages. No public or private street facing facade shall contain more than two (2) garage bays.

b) Perimeter Garages.

(1) Length. Any garage located with its rear wall along the perimeter of the property and within sixty-five (65) feet of a public right-of-way or the property line of the development site will not exceed fifty-five (55) feet in length. A minimum of eight (8) feet of landscaping must be provided between any two (2) such perimeter garages.

(2) Articulation. No rear garage wall that faces a public or private street or adjacent development shall exceed thirty (30) feet in length without including at least one (1) of the following in at least two (2) locations:

(a) Change in wall plane of at least two (2) feet;

(b) Change in material or siding pattern;

(c) Change in roof plane;

(d) Windows;

(e) Doorways;

(f) An equivalent vertical element that subdivides the wall into proportions related to human scale and/or the internal diversions within the building.

c) All Garages.

(1) Access Doors. Access doorways will be provided as reasonably necessary to allow direct access to living units without requiring people to walk around the garage to access their living units.

(2) Articulation. At a minimum, a vertical trim detail that subdivides the overall siding pattern will be provided at intervals not to exceed two (2) internal parking stalls (approximately twenty (20) to twenty-four (24) feet).

[25] g. Deferment of Requirements: The City may grant a deferment to the requirements of Section 401.15.C.8 of this Ordinance when a building or building addition will be constructed in more than one (1) phase. Any such deferment shall be processed as a conditional use permit pursuant to Section 401.03 of this Ordinance and shall be subject to the following:

1) The deferment shall be until the completion of construction or five (5) years, whichever is less.

2) Property owner shall provide the City with an irrevocable letter of credit for an amount one and one-half (1.5) the City Building Official's estimated cost of the required exterior wall treatment. The bank and letter of credit shall be subject to the approval of the City Attorney. The letter of credit shall assure compliance with this section of this Ordinance.

[25] h. Exceptions to Requirements: Exception to the provisions of Section 401.15.C.8 of this Ordinance may be granted as a conditional use permit pursuant to Section 401.03 of this Ordinance provided that:

1) The proposed building maintains the quality and value intended by the Ordinance.

2) The proposed building is compatible and in harmony with other existing structures within the district and immediate geographic area.

3) The provisions of Section 401.03.A.8 of this Ordinance are considered and determined to be satisfied.

[39] **401.15.D. Accessory Buildings, Uses and Equipment.**

1. **Connection with Principal Building:** An accessory building shall be considered an integral part of the principal building if it is connected to the principal building by a covered passageway.

[21] 2. **Location.** No accessory buildings shall be erected or located within any required yard other than the rear yard except by approval of a conditional use permit according to the provisions of Section 401.03 and Section 401.15.D.13 of this Ordinance.

[21, 39] 3. **Height/Setbacks.** Accessory buildings shall not exceed twenty (20) feet in height or exceed the height of the principal structure on the lot. Accessory buildings shall be five (5) feet or more from side lot lines, eight (8) feet from the rear lot line, and shall be six (6) feet or more from any other building or structure on the same lot. Accessory buildings may be closer than six (6) feet to other buildings or structures providing the requirements of the Building Code are met. Accessory buildings shall not be located within a utility and/or drainage easement unless written approval is obtained from the easement holder. The setback and height requirements under this provision may be varied by approval of a conditional use permit as provided for in Section 401.03 and Section 401.15.D.13 of this Ordinance.

[21] 4. **Lot Coverage.** No accessory building or detached garage or combination thereof within a residential district shall occupy more than twenty-five (25) percent of the area of the rear yard except by approval of a conditional use permit according to the provisions of Section 401.03 and Section 401.15.D.13 of this Ordinance.

[11] 5. **Number of Structures**. No building permit shall be issued for the construction of more than one (1) private garage or storage structure for each detached single family dwelling, commercial, industrial, public or institutional building except by approval of a conditional use permit according to the provisions of Section 401.03 and 401.15.D.13 of this Ordinance. Every detached single family dwelling unit erected after the effective date of this Ordinance shall be so located on the lot so that at least a two (2) car garage, either attached or detached, can be located on said lot.

[39] 6. **Size.** No accessory building for single family dwellings or combination of attached and detached accessory buildings shall exceed one thousand, two hundred (1,200) square feet of floor area, except by conditional use permit as provided for in Section 401.03 and Section 401.15.D.13 of this Ordinance.

7. **Administrative Approvals.** Storage buildings one hundred twenty (120) square feet or less and in conformance with the provisions of this Ordinance may be approved by the Building Official without a building permit, and may be in excess of the number of structures allowable in Section 401.15.D.5. above.

[21] 8. **Building Permit.** No building permit shall be issued for the construction of an accessory building in a residential district when an existing detached garage or other accessory building is located on the same lot, except by conditional use permit as provided for in Section 401.03 and Section 401.15.D.13 of this Ordinance.

9. **Accessory Uses.** No accessory uses or equipment such as air conditioning cooling structures or condensers, swimming pools, and the like which generate noise may be located in a side yard except for side yards abutting streets where equipment is fully screened from view.

[39] 10. **Compatibility.** The same or similar quality exterior material shall be used in the accessory building and in the principal building except as allowed as a temporary structure in Section 401.15.D.11 of this Ordinance. All accessory buildings shall also be compatible with the principal building on the lot. "Compatible" means that the exterior appearance of the accessory building including roof pitch and style is not at variance with the principal building from an aesthetic and architectural standpoint.

[39] 11. **Temporary Accessory Structures.** Temporary accessory structures shall be allowed in all zoning districts with the issuance of a special event permit for a maximum of 50 days in a calendar year, subject to the following:

a. The structure shall be securely fastened to the ground, subject to the safety requirements of the manufacturer.

b. The structure shall be kept in good condition and its appearance shall not be detrimental to the area or its adjacent properties.

c. The temporary use does not involve the erection of a substantial structure or require any other permanent commitment of the land.

d. The temporary structure shall be removed at the end of the permit period. If not removed within 10 days thereafter, the City shall have the right to remove the structure at the permittee's expense.

[39] e. Temporary structurers may be permitted for up to24 (twenty-four) continuous months in the R-1 and R-2 Residential Districts with City Council approval of an Interim Use Permit as proved for in Section 401.05. The application fee for an Interim Use Permit for the purpose in this section (e) shall not exceed $100.00.

12. **Trash Receptacles.** All buildings having exterior trash receptacles shall provide an enclosed area in conformance with the following:

a. Exterior wall treatment shall be similar and/or complement the principal building.

b. The enclosed trash receptacle area shall be located in the rear or side yard.

c. The trash enclosure must be in accessible location for pick up hauling vehicles.

d. The trash receptacles must be fully screened from view of adjacent properties and the public right-of-way.

e. The design and construction of the trash enclosure shall be subject to the approval of the Zoning Administrator.

13. **Conditional Use Permits.** Application for a conditional use permit under this sub-section shall be regulated by Section 401.03 of this Ordinance. Such a conditional use permit may be granted provided that:

a. There is a demonstrated need and potential for continued use of the structure for the purpose stated.

b. In the case of residential uses, no commercial or home occupation activities are conducted on the property.

c. The building has an evident re-use or function related to the principal use.

d. Accessory building shall be maintained in a manner that is compatible with the adjacent residential uses and does not present a hazard to public health, safety and general welfare.

[21] e. The reduction of setback requirements is based upon a specific need or circumstance which is unique to the property in question and which, if approved, will not set a precedent which is contrary to the intent of this Ordinance.

[21] f. Existing property line drainage and utility easements are provided for and no building will occur upon this reserved space unless approved in writing by the easement holder.

[21] g. The reduction will work toward the preservation of trees or unique physical features of the lot or area.

[21] h. If affecting a north lot line, the reduction will not restrict sun access from the abutting lots.

[21, 39] i. The building height of an accessory building shall not exceed twenty (20) feet.

[21, 39] j. Accessory buildings or detached garages or combination thereof within a residential district shall not occupy more than twenty-five (25) percent of the rear yard.

k. The provisions of Section 401.03.A.8 of this Ordinance shall be considered and a determination made that the proposed activity is in compliance with such criteria.

401.15.E. Fencing, Screening and Landscaping.

1. **Building Permit.** No person shall hereafter construct or cause to be constructed or erected within the City of Oak Park Heights, any fence without first making an application for and securing a building permit.

[23, 35] 2. **Application Requirements.** Each application for a permit under this section shall be submitted to the Zoning Administrator on forms provided by the City. Each such application shall include a site plan drawn to scale showing the location of house(s), garage(s), and other improvements on the lot and the location of the fencing to be erected, altered or relocated. A certificate of survey shall be required for all fences (including hedges and plantings) to be constructed up to or on the property line, unless:

a. Property stakes on the affected property lines are first located and marked by a licensed and registered Minnesota surveyor.

b. Or, an agreement is reached between the property owners as to the accepted or property line.

3. **General Provisions.** All fences within the City shall be subject to the following general provisions:

a. No fences shall be placed on or extend into the public rights-of-way.

b. All fences shall be located entirely upon the property of the person constructing or causing the construction of such fence.

c. That side of any fence considered to be its “face” (i.e., the finished side having no structural supports) shall face abutting property.

d. Both sides of any fence shall be maintained in a condition of reasonable repair and appearance by its owner and shall not be allowed to become and remain in a condition of disrepair or danger, or constitute a nuisance, public or private.

e. Barbed wire fences are only allowed in the City by conditional use permit.

f. No person shall construct or maintain or allow to be constructed or maintained anywhere within the City any fence or metal construction which is charged by or connected with an electrical system.

g. No physical damage of any kind shall occur to abutting property.

h. All man-made fences located in front of the rear building line shall consist of materials comparable in grade and quality to the following: decorative masonry, wrought iron or wood, provided the surfaces are finished for exterior use, or wood of proven durability is used, such as cedar or redwood.

i. For the purpose of fence regulations, in the case of a corner lot, both yards abutting a street shall be considered a front yard.

35, 41 4. **Specific Fence Standards.** The height of fence is measured from the highest projection of a fence structure or support post to the adjacent finished grade and shall be restricted according to location as follows:

35, 41 a. Fences or walls located on or adjacent to any property line bordering a public road or street shall not exceed seven (7) feet in height. However, in no case shall any shrub, hedge or fence bordering upon any street or sidewalk be constructed or allowed to grow to a height which could obstruct safe driving visibility at intersections.

35 b. Fences or walls on or adjacent to the shore line of any navigable lake, channel or stream shall not exceed four (4) feet in height. Fences or walls on or along that portion of a lot line from a navigable lake, channel or stream to the rear side of the average building construction line shall not exceed four (4) feet in height.

23, 35 c. Fences or walls on or within ten (10) feet or less from a common property line between two adjoining lots or parcels not owned by the same person, firm or corporation shall not exceed seven (7) feet in height. The property owner shall provide written notification to adjoining property owners concurrent with the application for a building permit for a fence installation which is less than five (5) feet from a property line. Fences or walls shall be permitted except as prohibited in sub-paragraphs b. and d. hereof.

35 d. Fences or patio walls not exceeding nine (9) feet in height may be constructed without restriction on the interior of any lot or parcel, providing no such fence or wall shall be closer than ten (10) feet to any common property line between adjoining lots not owned by the same person, firm or corporation (except as permitted under sub-paragraph c. hereof), and provided further in the case of lakeshore lots, no such fence or wall shall be located so as to block or otherwise adversely interfere with an adjoining property owner's lake view.

35 e. Open wire fences not exceeding eleven (11) feet in height enclosing tennis courts, pools, and similar uses, shall be permitted without restriction.

5. **Swimming Pool Fences**. Outdoor swimming pool fences shall be required as outlined in Section 1303 of the City Code.

6. **Non-Conforming Fences**. It is the intent of this Ordinance to allow the continuation of such non-conforming fences until they are discontinued as provided herein. However, it is not the intent of this Ordinance to encourage the survival of non-conforming fences and such fences are declared to be incompatible with permitted fences within the City. Such fences shall be regulated by the following provisions:

   a. No existing fence not permitted by this Ordinance in the district within which it is located, except when required to do so by law or ordinance, shall be enlarged, extended, reconstructed or structurally altered unless such fence is changed to one permitted in that district. Maintenance of a non-conforming fence will be allowed, however, when this includes necessary repairs and incidental alterations which do not expand or intensify the non-conforming fence.

7. **General Landscaping and Maintenance.** All exposed ground areas surrounding or within a principal or accessory use, including street boulevards, and not devoted to parking areas, drives, sidewalks, patios or other such uses shall be completely landscaped with grass, shrubs, trees or other ornamental landscape materials before the Building Official issues the certificate of occupancy or if construction is completed during the Winter, no later than May 31 of the year or following year of construction completion. All landscaped areas shall be kept neat, clean and uncluttered, and where a landscape plan is required by City approval any plant material which is diseased or dies shall be replaced with like kind of the original size. No landscaped area shall be used for the parking of vehicles or for the storage or display of materials, supplies or merchandise. Fences and/or plantings placed upon utility easements are subject to removal by the City or utility company if required for maintenance or improvement of the utility. Trees on utility easements containing overhead wires shall not exceed twenty (20) feet in height, which it shall be the property owner's responsibility to maintain.

[11] 8. **Required Fencing and Screening.** Where any public, institutional, business or industrial use (i.e., structure, parking or storage) abuts property zoned for residential use, that public, institutional, business or industrial use shall provide screening along the boundary of the residential property. Screening shall also be provided where a public, institutional, business or industrial use is across the street from a residential zone, but not on that side of a public, institutional, business or industrial use considered to be the front (as determined by the Building Official). All the fencing and screening specifically required by this Ordinance shall be subject to Section 401.15.E.3. and shall consist of either a fence or a green belt planting strip as provided for below.

a. A green belt planting strip shall consist of evergreen trees and/or deciduous trees and large shrubs and shall be of sufficient width and density to provide an effective visual screen. This planting strip shall contain no structures other than supplementary fencing. Such planting strip shall be designed to provide complete visual screening to a minimum height of eight (8) feet. Earth mounding or berms may be used but shall not be used to achieve more than three (3) feet of the required screen. The planting plan and type of plantings shall require the approval of the City Council based upon a recommendation of the City staff.

b. A required screening fence shall be constructed of masonry, brick, wood or metal. Such fence shall provide a solid screening effect and not exceed eight (8) feet in height or be less than six (6) feet in height. The design and materials used in constructing a required screening fence shall be subject to the approval of the City Council based upon a recommendation by the City staff.

9. **Required Landscaping - General Residential.** The lot area remaining after providing for off-street parking, off-street loading, sidewalks, driveways, building site and/or other requirements shall be landscaped using sod in the front and side yards, and ornamental grass, or other acceptable vegetation or treatment generally used in landscaping in the rear yards. Fences or trees placed upon utility easements are subject to removal if required for the maintenance or improvement of the utility.

[11] 10. **Required Landscaping - Public, Institutional, Semi-Public and All Income Producing Property Uses.** Prior to approval of a building permit, all above referenced uses shall be subject to a mandatory landscape plan requirement. Said landscape plan should be developed with an emphasis upon the following areas:

The boundary or perimeter of the proposed site at points adjoining another existing or proposed site or sites; the immediate perimeter of the structure or building at points of its placement on the site; and the public boulevard areas at points of interface with streets or sidewalk areas of the City.

All landscaping incorporated in said plan shall conform to the following standards and criteria:

a. All plants must at least equal the following minimum sizes:

		Potted/Bare Root	Balled and Burlapped
Shade Trees*		1-3/4 in. diameter	2-1/2 in. dia.
Half Trees (Flowering Crab, Russian Olive, Hawthorn, etc.)		6-7 feet	1.5 in. dia.
Evergreen Trees		-----	6-8 feet
Tall Shrubs and Hedge Material (evergreen or deciduous)		3-4 feet	3-4 feet
Low Shrubs:	Deciduous	18-24 in.	24-30 in.
	Evergreen	18-24 in. potted	24-30 in.
	Spreading Evergreens	18-24 in. potted	18-24 in.

Type and mode are dependent upon time of planting season, availability and site conditions (soils, climate, ground water, man-made irrigation, grading, etc.)

* All boulevard trees must be at least 2-1/2 inches caliper.

b. Spacing.

1) Plant material centers shall not be located closer than three (3) feet from the fence line or property line and shall not be planted to conflict with public plantings based on the judgment of the City administration.

2) Where plant materials are planted in two (2) or more rows, plantings shall be staggered in rows unless otherwise approved by the City administration.

3) Deciduous boulevard trees shall be planted not more than forty (40) feet apart.

4) Where massing of plants or screening is intended, large deciduous shrubs shall not be planted more than four (4) feet on center, and/or evergreen shrubs shall not be planted more than three (3) feet on center.

c. Design.

1) The landscape plan must show some form of designed site amenities (i.e., composition of plant materials, and/or creative site grading, decorative lighting, exterior sculpture, etc., which are largely intended for aesthetic purposes).

2) All areas within the property lines (or beyond, if site grading extends beyond) shall be treated. All exterior areas not paved or designated as roads, parking, or storage must be planted into ornamental vegetation (lawns, ground covers, or shrubs) unless otherwise approved by the City.

3) Landscape material selection and placement shall take into account sight visibility of adjoining buildings and signage. Landscape materials at the time of placement or upon reaching maturity shall not block the view of surrounding business establishments and related signage.

4) Turf slopes in excess of 2:1 are prohibited.

5) All ground areas under the building roof overhang must be treated with a decorative mulch and/o foundation planting.

6) All buildings must have an exterior water spigot to insure that landscape maintenance can be accomplished.

d. Landscape Guarantee. All plants shall be guaranteed for one (1) full year from the time planting has been completed. All plants shall be alive and in satisfactory growth at the end of the guarantee period or be replaced.

e. Screening of Mechanical Equipment. Mechanical equipment located on the roof or adjacent to any building and visible from the street level or from neighborhood properties shall be screened with a material designed to blend harmoniously with the building's facing materials. Where buildings have exposure to buildings with higher elevation, roof equipment shall be totally screened or enclosed with a material to blend with the roof surface material.

401.15.F. Off-Street Parking and Loading.

1. **Off-Street Parking Purpose**. The regulation of off-street parking spaces in these zoning regulations is to alleviate or prevent congestion of the public right-of-way and to promote the safety and general welfare of the public, by establishing minimum requirements for off-street parking of motor vehicles in accordance with the utilization of various parcels of land or structures.

2. **Application of Off-Street Parking Regulations.** The regulations and requirements set forth herein shall apply to all off-street parking facilities in all of the zoning districts of the City.

[1] 3. **Site Plan Drawing Necessary.** All applications for a building or an occupancy permit in all zoning districts shall be accompanied by a site plan drawn to scale and dimension indicating the location of off-street parking and loading spaces in compliance with the requirements set forth in this Section. All site plans for single family homes must provide for the location of a two (2) stall garage in compliance with this Chapter.

4. **General Provisions.**

a. Floor Area. The term "floor area" for the purpose of calculating the number of off-street parking spaces required shall be determined on the basis of the exterior floor area dimensions of the buildings, structures or use times the number of floors, minus ten (10) percent, except as may hereinafter be provided or modified.

b. Reduction of Existing Off-Street Parking Space or Lot Area. Off-street parking spaces and loading spaces or lot area existing upon the effective date of this Section shall not be reduced in number or size, unless said number or size exceeds the requirements set forth herein for a similar new use.

c. Non-Conforming Structures. Should a non-conforming structure or use be damaged or destroyed by fire, it may be re-established if elsewhere permitted in these zoning regulations, except that in doing so, any off-street parking or loading space which existed before shall be retained.

d. Change of Use or Occupancy of Land. No change of use or occupancy of land already dedicated to a parking area, parking space, or loading spaces shall be made, nor shall any sale of land, division or subdivision of land be made which reduces area necessary for parking, parking stalls, or parking requirements below the minimum prescribed by these zoning regulations.

e. Change of Use or Occupancy of Buildings. Any change of use or occupancy of any building or buildings, including additions thereto requiring more parking area shall not be permitted until there is furnished such additional parking spaces as required by these zoning regulations.

f. Residential Use Parking.

1) Except as provided below in Subsection 4.f.2 and except on a limited, temporary basis involving guests or work being performed on site, on and off-street parking facilities shall be utilized solely for the parking of licensed and operable passenger automobiles, vans, one (1) truck not to exceed gross capacity of twelve thousand (12,000) pounds; and recreational vehicles and equipment which are the property of the occupant, except as provided below in Subsection 4.f.2. Under no circumstances shall required facilities accessory to residential

structures be used for the storage of non-qualifying commercial vehicles, commercial equipment, or for the parking of automobiles belonging to the employees, owners, tenants or customers of business or manufacturing establishments.

2) For detached single family uses in residential zoning districts, the off-street parking of vehicles other than those stipulated in Subsection 4.f.1 above may be allowed as an interim use permit pursuant to Section 401.05 of these zoning regulations, provided that:

a) The property fronts on an improved public street which is determined by the City Engineer to be capable of carrying the vehicles in question without undue damage.

b) The type of vehicle to be parked does not create an unreasonable safety hazard to neighboring residents or the public utilizing the street(s) servicing the property.

c) The site upon which the vehicle is parked has adequate space to allow turning movements and parking which does not result in the backing of vehicles from or onto the public street.

d) The parking of such vehicles does not adversely affect neighboring property owners as it relates to noise.

e) The parking of such vehicles is screened from neighboring properties and the public right-of-way to the extent determined as necessary by the City Council in compliance with Section 401.15.E. of this Ordinance.

f) The provisions of Section 401.05 of this Ordinance are considered and determined to be satisfied.

g. Calculating Space.

1) When determining the number of off-street parking spaces results in a fraction, each fraction shall constitute another space.

2) In stadiums, sports arenas, churches and other places of public assembly in which patrons or spectators occupy benches, pews or other similar seating facilities, each twenty-two (22) inches of such seating facilities shall be counted as one seat for the purpose of determining requirements.

3) Except as provided for under joint parking and shopping centers, should a structure contain two (2) or more types of use, the sum of each shall be calculated separately and shall be used for determining the total off-street parking spaces required.

h. Stall, Aisle and Driveway Design.

1) Parking Space Size. Except for handicapped parking spaces, each parking space shall not be less than nine (9) feet wide and twenty (20) feet in length exclusive of access aisles, and each space shall be served adequately by access aisles.

2) Street Access. All off-street parking facilities shall be designed and constructed with appropriate means of vehicular access to a public street. Except in the case of a planned unit development, each lot shall have access directly onto an abutting, improved and City accepted public street. Exception to this access requirement may be allowed as a conditional use permit pursuant to Section 401.03 of this Ordinance.

3) Within Structures. The off-street parking requirements may be furnished by providing a space so designed within the principal building or one (1) structure attached thereto; however, unless provisions are made, no building permit shall be issued to convert said parking structure into a dwelling unit or living area or other activity until other adequate provisions are made to comply with the required off-street parking provisions of this Ordinance.

4) Lot Circulation. Except in the case of single, two-family, townhouse, quadraminium, and manor home dwellings, parking areas shall be designed so that circulation between parking bays or aisles occurs within the designated parking lot and does not depend upon a public street or alley. Except in the case of single, two-family, townhouse, quadraminium, and manor home dwellings, parking area design which requires backing into the public street is prohibited.

5) Intersection Separation. No curb cut access shall be located less than sixty (60) feet from the intersection of two (2) or more street rights-of-way. This distance shall be measured from the intersection of lot lines.

6) Lot Design. Except in the case of single family, two-family, townhouse, quadraminium, and manor home dwellings, parking areas and their aisles shall be developed in compliance with the standards on the Parking Lot Dimension Table as follows.

7) Parallel Parking. Parallel parking spaces shall be at least twenty-two (22) feet in length.

8) Curb Cut Size. No curb cut access shall exceed twenty-four (24) feet in width, or thirty-two (32) feet when accessing a State highway, except by conditional use permit.

9) Side Yard Setback. Except with special approval from the Zoning Administrator, curb cut openings shall be a minimum of five (5) feet from the side yard property line in all districts.

PARKING LOT DIMENSIONS TABLE *

Angle of Parking	Stall Width	Curb Length Per Car	Stall Depth	Aisle Width	Angle of Parking	Stall Width	Curb Length Per Car	Stall Depth	Aisle Width
0°	8'6"	23'0"	8'6"	12'0"	50°	8'6"	11'2"	20'0"	12'6"
	9'0"	23'0"	9'0"	12'0"		9'0"	11'9"	20'5"	12'0"
	9'6"	23'0"	9'6"	12'0"		9'6"	12'5"	20'9"	12'0"
	10'0"	23'0"	10'0"	12'0"		10'0"	13'2"	21'0"	12'0"
20°	8'6"	24'11"	14'6"	11'0"	60°	8'6"	9'10"	20'9"	18'6"
	9'0"	26'4"	15'0"	11'0"		9'0"	10'5"	21'0"	18'0"
	9'6"	27'10"	15'6"	11'0"		9'6"	11'0"	21'3"	18'0"
	10'0"	29'3"	15'11"	11'0"		10'0"	11'6"	21'6"	18'0"
30°	8'6"	17'0"	16'11"	11'0"	70°	8'6"	9'0"	20'10"	19'6"
	9'0"	18'0"	17'4"	11'0"		9'0"	9'8"	21'0"	19'0"
	9'6"	19'0"	17'10"	11'0"		9'6"	10'2"	21'3"	18'6"
	10'0"	20'0"	18'3"	11'0"		10'0"	10'8"	21'3"	18'0"
40°	8'6"	13'3"	18'9"	12'0"	80°	8'6"	8'8"	20'3"	24'0"
	9'0"	14'0"	19'2"	12'0"		9'0"	9'2"	20'4"	24'0"
	9'6"	14'10"	19'6"	12'0"		9'6"	9'8"	20'5"	24'0"
	10'0"	15'8"	19'11"	12'0"		10'0"	10'3"	20'6"	24'0"
45°	8'6"	12'0"	19'5"	13'6"	90°	8'6"	8'6"	20'0"	24'0"
	9'0"	12'9"	19'10"	13'0"		9'0"	9'0"	20'0"	22'0"
	9'6"	13'5"	20'2"	13'0"		9'6"	9'6"	20'0"	22'0"
	10'0"	14'2"	20'6"	13'0"		10'0"	10'0"	20'0"	22'0"

* This table pertains to a wall to wall situation. In calculating dimensions, two (2) feet may be subtracted from each stall depth for each overhang and overlap. No subtraction for overlap is allowed for angles greater than sixty (60°) degrees.

a Curb length per car
b Stall width
c Angle of parking
d Stall depth
e Aisle width
f Stall length
g Overlap
h Overhang

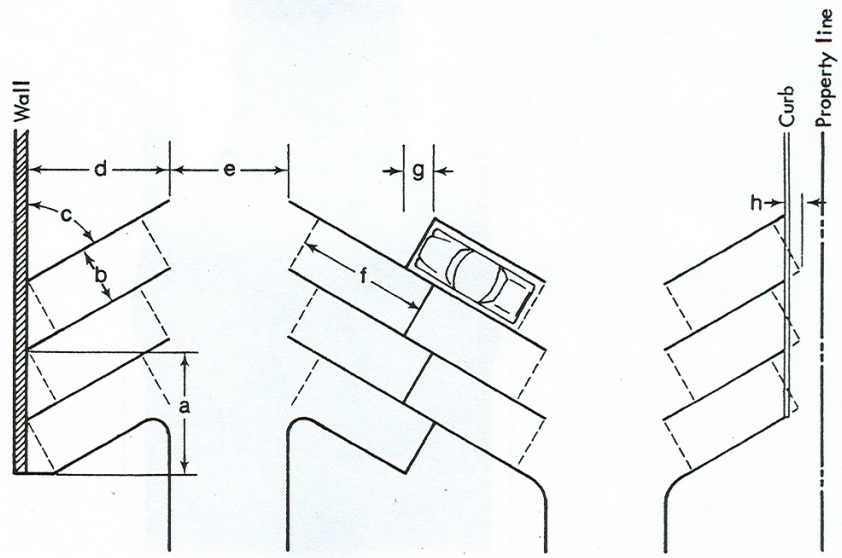

10) Curb Cut Spacing. Driveway access curb openings on a public street except for single, two-family, quadraminium, manor home, and townhouse dwellings, shall not be located less than forty (40) feet from one another.

11) Grade. The grade elevation of any parking area or driveways shall not exceed ten (10) percent.

12) Number of Curb Cuts. Each property shall be allowed one (1) curb cut access for each one hundred twenty-five (125) feet of street frontage. All property shall be entitled to at least one curb cut.

13) Surfacing. All areas intended to be utilized for parking space and driveways shall be hard surfaced with materials suitable to control dust and drainage. Plans for surfacing and drainage of driveways and stalls for five (5) or more vehicles shall be submitted to the City Engineer for review and the final drainage plan shall be subject to written approval.

14) Striping. Except for single, two-family townhouse, quadraminiums, all parking stalls shall be marked with white or yellow painted lines not less than four (4) inches wide.

15) Lighting. Any lighting used to illuminate an off-street parking area shall be hooded and so arranged as to reflect the light away from adjoining property, abutting residential uses, and public rights-of-way, and shall be in compliance with Section 401.15.B.7. of this Ordinance.

[1] 16) Signs. No sign shall be so located as to restrict the sight lines and orderly operation and traffic movement within any parking lot or driveway. All signs shall be in conformance with Section 401.15.G of this Ordinance.

[34] 17) Curbing and Landscaping. Except for single and two-family dwellings, all open, off-street parking shall have a continuous concrete perimeter curb barrier around the entire parking lot; said curb barrier shall not be closer than ten (10) feet to any lot line or right of way line. Grass plantings and landscaping shall be provided in all areas bordering the parking area.

18) Required Screening. All open off-street parking areas of five (5) or more spaces shall be screened and landscaped from abutting or surrounding residential districts and uses, and the public right-of-way in compliance with Section 401.15.E. of this Ordinance.

19) Snow Storage. Adequate space for snow storage shall be provided on the site so as not to reduce the required minimum number of parking spaces. In those cases where excessive snow cannot be properly stored on site, it shall be immediately removed from the site.

20) Driveway Turn Around. In the case of single family, two-family, townhouse, quadraminium, and manor home dwellings, which front on streets designated as collector, minor arterial, intermediate arterial and principal arterial by the City's Comprehensive Plan, the installation of a vehicle turn-around space, immediately adjacent to the access driveway is allowed and may be required by the City Council. Said space is to be no larger than ten (10) feet wide and ten (10) feet in length. Where possible, said space shall be located away from the principal structure and shall be no closer than twenty (20) feet from the street surface. Said space shall not to be utilized for parking or storage purposes.

5. **Maintenance.** It shall be the joint and several responsibility of the lessee and owner of the principal use, uses or buildings to maintain in a neat and adequate manner, the parking space, accessways, striping, landscaping and required fencing and screening.

[1] 6. **Location.** All accessory off-street parking facilities as required by this Ordinance shall be located and restricted as follows:

a. Required accessory off-street parking shall be on the same lot under the same ownership as the principal use being served, except under the provisions of Section 401.15.F.10.

b. Except for single, two-family, townhouse, quadraminium, and manor home dwellings, head-in parking, directly off of and adjacent to a public street, with each stall having its own direct access to the public street, shall be prohibited.

c. The boulevard portion of the street right-of-way shall not be used for parking, except on a designated driveway.

d. Setback Area - Required Accessory Off-street Parking. Required accessory off-street parking shall be provided for single family dwellings within the R-1 and R-2 Districts and for quadraminium and townhouse dwellings within R-3 and R-B Districts, in a garage, car port, or on a defined driveway leading directly into a garage or car port, and shall be constructed of concrete, asphalt, cobblestone, or paving block.

e. Setback Area - Accessory Off-Street Parking (General). Accessory off-street parking provided above and beyond the requirements of this Ordinance for single family uses within R-1 and R-2 Districts and quadraminium and

townhouse dwellings within R-3 and R-B Districts shall be subject to written approval of abutting residential neighbors and the following: Accessory off-street parking shall be provided on a designated driveway leading directly into a garage and/or on one (1) designated parking pad contiguous to the driveway and located away from the principal use. Said accessory off-street parking area may be located within the front, side, or rear yard setback and must be constructed of concrete, asphalt, cobblestone, paving block or crushed rock that at a minimum meets Class Five (5) material specifications and has at least a four (4) inch deep base. Said parking pad must be set back at least five (5) feet from rear property lines.

f. Truck and Trailer Parking in Residential Areas. No more than one (1) truck and/or trailer not to exceed a gross capacity of twelve thousand (12,000) GVW shall be parked off-street in a residentially zoned district, except when loading, unloading or rendering a service.

g. Violations may be enforced through tagging.

h. Trailers, Recreational Vehicles, and Boat Parking in Residential Areas. Trailers, recreational vehicles or boats shall be allowed on a driveway or designated pad. All trailers, recreational vehicles and boats shall be parked at least five (5) feet from rear property lines.

7. **Use of Required Area**. Required accessory off-street parking spaces in any district shall not be utilized for open storage, sale or rental of goods, repair work, storage of inoperable vehicles, and/or storage of snow.

8. **Handicapped Parking Spaces**. Except for single family, two-family, townhouse, quadraminium, and manor home dwellings, at least one handicapped parking space shall be provided for each use. Per the Americans with Disabilities Act (ADA), an additional space shall be provided for each increment of twenty-five (25) spaces in excess of the initial twenty-five (25) spaces. Handicapped spaces shall be at minimum twelve (12) feet by twenty (20) feet, shall be located so as to provide convenient, priority access to the principal use and shall conform to Minnesota Statutes, Section 168.021, as may be amended.

9. **Number of Spaces Required**. The following minimum number of off-street parking spaces shall be provided and maintained by ownership, easement and/or lease for and during the life of the respective uses hereinafter set forth. The City Council reserves the right to establish parking requirements for any use not specifically provided for hereafter, or after any requirement as necessary to meet the objectives of this Section. Factors to be considered in such determination shall include (without limitation) size of buildings, type of use, number of employees, expected volume and turnover of customer traffic and expected frequency and number of delivery or service vehicles.

a. Auto Repair, Major Bus Terminal, Taxi Terminal, Bottling Company, Shop for a Trade Employing Six (6) or Less People, Garden Supply Store, Building Material Sales in Structure. Eight (8) off-street parking spaces, plus one (1) additional space for each eight hundred (800) square feet of floor area over one thousand (1,000) square feet.

b. Baseball Fields, Stadiums. At least one (1) parking space for each eight (8) seats of design capacity.

c. Boat and Marine Sales and Service. One (1) space for each four hundred (400) square feet of floor area for the first twenty-five thousand (25,000) square feet, plus one (1) space for each six hundred (600) square feet thereafter.

d. Boating Marinas and Yacht Clubs. Seven (7) spaces for each ten (10) boat or mooring spaces.

e. Banks. One space per two hundred fifty (250) square feet of floor area.

f. Banks (Drive-in). Two (2) spaces for each drive-in unit plus drive aisle stacking space of one hundred eighty (180) feet for each drive-in unit.

g. Boarding and Lodging House. At least one (1) parking space for each two (2) persons for whom accommodations are provided for sleeping.

h. Bowling Alley. At least five (5) parking spaces for each alley, plus additional spaces as may be required herein for related uses contained within the principal structure plus one space for every employee.

i. Car Wash. (In addition to required magazining or stacking space).

1) Automobile Drive Through, Services. A minimum of ten (10) spaces, or one (1) space for each employee on the maximum shift, whichever is greater.

2) Self-Service. A minimum of two (2) spaces.

3) Motor Fuel Station Car Wash. Zero (0) in addition to that required for the station.

j. Churches, Auditorium. At least one parking space for each three (3) seats based on the design capacity of the main assembly hall. facilities as may be provided in conjunction with such buildings or uses shall be subject to additional requirements which are imposed by this Ordinance.

k. Clinics. One (1) space per one hundred (100) square feet of floor area.

l. Community Centers, Physical Culture Studios, Libraries, Private Clubs, Lodges, Art Galleries. Ten (10) spaces plus one for each one hundred fifty (150) square feet in excess of two thousand (2,000) square feet of floor area in the principal structure.

m. Elderly (Senior Citizen) Housing. Reservation of area equal to one (1) parking space per unit. Initial development is, however, required for only one-half (2) space per unit and said number of spaces can continue until such time as the City considers a need for additional parking spaces has been demonstrated.

n. Funeral Home. At least twenty (20) parking spaces for each chapel or parlor, plus one (1) parking space for each funeral vehicle maintained on the premises. Aisle space shall also be provided off the street for making up a funeral procession.

o. Furniture and Appliance Stores. One (1) space per four hundred (400) square feet of floor area.

p. Golf course, Golf Clubhouse, Country Club, Swimming Club, Tennis Club, Public Swimming Pool. Twenty (20) spaces plus one (1) space for each five hundred (500) square feet of floor area in the principal structure.

q. Golf Driving Range, Miniature Golf, Archery Range. Ten (10) off-street parking spaces plus one (1) for each one hundred (100) square feet of floor area.

r. Hospitals. One space for each two (2) patient beds (excluding bassinets), plus one additional space for each doctor including visiting doctors, plus one space for each two (2) employees including nurses; loading and unloading space for hospital ambulances and similar vehicles are not included in the spaces required.

s. Manufacturing, Fabricating or Processing of a Product or Material; . At least eight (8) spaces plus one (1) space for each two (2) employees on each shift based on maximum planned employment or at a minimum at least eight (8) spaces plus one (1) space for each five hundred (500) square feet of floor area.

t. Motels, Motor Hotels, Hotels, Resorts. One (1) space per each rental unit plus one (1) additional space for each ten (10) units and one (1) space for each employee shift. In addition, one (1) space per forty (40) square feet of meeting and/or banquet room.

u. Motor Fuel Station. At least four (4) off-street parking spaces plus two (2) off-street parking spaces for each service stall. Those facilities designed for sale of other items than strictly automotive products, parts or service shall be

required to provide additional parking in compliance with other applicable provisions of this Ordinance.

v. Multiple Family Dwellings. At least two (2) free spaces per unit.

w. Office Buildings, Animal Hospitals, Professional Offices, Medical and Dental Clinics. Three (3) spaces plus at least one space for each two hundred (200) square feet of floor area.

x. Post Office. One space for each four hundred (400) square feet of floor area plus one space for each employee.

y. Public Parks, Playgrounds and Playfields. At least five (5) parking spaces for each acre of park over one (1) acre; two (2) parking spaces per acre for playgrounds, and ten (10) spaces for each acre of playfield. When a public recreation site has more than one (1) use designation, the areas must be divided for determining the required parking spaces.

z. Research, experimental or testing station. One (1) space per each employee on the largest shift or one (1) space per five hundred (500) square feet of floor area whichever is greater.

aa. Restaurants, Cafes, Private Clubs Serving Food and/or Drinks, Bars, Taverns, Nightclubs. At least one (1) space for each forty (40) square feet of gross floor area of dining and bar area and one (1) space for each eighty (80) square feet of kitchen area.

bb. Drive-in Restaurant and Fast Food Restaurant. At least one (1) parking space for each thirty-five (35) square feet of gross floor area of service and dining area, but not less than fifteen (15) spaces. Two (2) additional parking spaces shall be added for drive-through services facilities and one (1) space for each eighty (80) square feet of kitchen/storage area. Additionally, one hundred eighty (180) feet of drive aisle stacking space shall be provided for drive-through facilities.

cc. Retail Store and Service Establishment. At least one (1) off-street parking space for each two hundred (200) square feet of floor area.

dd. Retail Sales and Service Business with Fifty (50) Percent or More of Gross Floor Area Devoted to Storage, Warehouse and/or Industry. At least eight (8) spaces or one (1) space for each two hundred (200) square feet devoted to public sales or service plus one (1) space for each five hundred (500) square feet of storage area; or at least eight (8) spaces and one (1) space for each employee on the maximum shift, whichever is appropriate.

ee. Sanitariums, Convalescent Home, Rest Home, Nursing Home or Day Nurseries. Four (4) spaces plus one (1) for each three (3) beds for which

accommodations are offered and one space designated for emergency vehicles.

ff. School, Elementary and Junior High. At least one (1) parking space for each classroom plus one additional space for each fifty (50) students. Auditorium or event space shall be subject to a separate, additional calculation.

gg. School, High School through College and Private and Day or Church Schools. At least one (1) parking space for each seven (7) students based on design capacity plus one (1) for each three (3) classrooms. Auditorium or event space shall be subject to a separate, additional calculation.

[1] hh. Single Family, Two-Family, and Townhouse Unit. Two (2) spaces per unit, both of which are in a covered garage structure.

ii. Shopping Centers. Six (6) spaces per each one thousand (1,000) square feet of gross floor area.

jj. Skating Rink, Dance Hall, or Public Auction Houses. Twenty (20) off-street parking spaces, plus one (1) additional off-street parking space for each two hundred (200) square feet of floor space over two thousand (2,000) square feet.

kk. Theaters, Civic Centers, Auditoriums, Stadiums, Sports Arenas or Similar Uses. One space for each four (4) seats, plus one space for each two (2) employees.

ll. Warehousing, Storage or Handling of Bulk Goods. One (1) space per two (2) employees of the largest shift or one (1) space per each one thousand five hundred (1,500) square feet of floor area, whichever is greater.

mm. Wholesale Business Establishments. One (1) space per each employee on the largest shift or one (1) space per two thousand (2,000) square feet of floor area whichever is greater. In addition, one (1) space per company motor vehicle on the premises.

nn. All other commercial. Ten (10) spaces per one thousand (1,000) square feet of floor area.

oo. Space Reductions. Subject to the review and processing of a conditional use permit as regulated by Section 401.03 of this Ordinance, the City may reduce the number of required off-street parking spaces when the use can demonstrate in documented form a need which is less than required. In such situations, the City may require land to be reserved for parking development should use or needs change.

10. **Joint Facilities.**

a. The City Council may approve a conditional use permit, pursuant to Section 401.03 of this Ordinance, for one or more businesses to provide the required off-street parking facilities by joint use of one or more sites where the total number of spaces provided are less than the sum of the total required for each business should they provide them separately. To qualify for joint parking the following conditions are required to exist:

1) Up to fifty (50) percent of the parking facilities required for a theater, bowling alley, bar or restaurant may be supplied by the off-street parking facilities provided by types of uses specified as primarily daytime uses in subsection (2) below.

2) Up to fifty (50) percent of the off-street parking facilities required for any use specified under (4) below as primarily daytime uses may be supplied by the parking facilities provided by the following night time or Sunday uses: auditoriums incidental to a public or parochial school, churches, bowling alleys, dance halls, theaters, bars, restaurants, or apartments.

3) Up to eighty (80) percent of the parking facilities required by this Section for a church or for an auditorium incidental to a public or parochial school may be supplied by the off-street parking facilities provided by uses specified under (4) below as primarily daytime uses.

4) For the purposes of this Section, the following uses are considered as primarily daytime uses: public schools, banks, business offices, retail stores, personal service shops, household equipment or furniture shops, clothing or shoe repair or service shops, manufacturing, wholesale and similar uses.

5) Conditions Required for Joint Use:

a) The building or use for which application is being made to utilize the off-street parking facilities provided by another building or use shall be located within three hundred (300) feet of such parking facilities.

b) Documentation as specified by the City shall be submitted demonstrating that there is no substantial conflict in the principal operating hours of the two (2) buildings or uses for which joint use of off-street parking facilities is proposed.

c) A properly drawn legal instrument, executed by the parties concerned for joint use of off-street parking facilities, duly approved as to form and manner of execution by the City Attorney, shall be filed with the City Clerk and recorded with the Washington County Recorder's office.

11. **Off-Site Parking.**

a. Any off-site off-street parking which is used to meet the requirements of this Ordinance shall be a conditional use as regulated by Section 401.03 of this Ordinance and shall be subject to the conditions listed below.

b. Off-site parking shall be developed and maintained in compliance with all requirements and standards of this Ordinance.

c. Reasonable access from off-site parking facilities to the use being served shall be provided.

d. The site used for meeting the off-site parking requirements of this Ordinance shall be under the same ownership as the principal use being served or under public ownership.

e. Off-site parking for multiple family dwellings shall not be located more than one hundred (100) feet from any normally used entrance of the principal use served.

f. The parking lot is not to be used for sales, repair work or servicing of any kind.

g. No advertising sign or material is to be located on the property where the parking lot is located.

h. All parking is to be kept back of the setback building line by barriers unless otherwise specifically authorized by the City Council.

i. Except as provided below, the site used for meeting the off-site parking requirements of this Ordinance shall be under the same ownership as the principal use being served or under public ownership.

j. Except as provided below, off-site parking for non-residential uses shall not be located more than three hundred (300) feet from the main public entrance of the principal use being served. No more than one (1) main entrance shall be recognized for each principal building.

k. Any use which depends upon off-site parking to meet the requirements of this Ordinance shall maintain ownership and parking utilization of the off-site

location until such time as on-site parking is provided or a site in closer proximity to the principal use is acquired and developed for parking.

l. Compliance with off-street parking requirements provided through leased off-street parking may be approved by the City Council, subject to the following conditions:

1) The lease shall specify the total number and location of parking spaces under contract and this number, when added to any on-site parking required, must be equal to the total number of parking spaces required.

2) The lease instrument shall legally bind all parties to the lease and provide for amendment or cancellation only upon written approval from the City.

3) The lease agreement shall incorporate a release of liability and any other provisions, as recommended by the City Attorney that are deemed necessary to ensure compliance with the intent of this Section.

m. Any such other conditions as may be deemed necessary by the City Council to protect the welfare and character of the nearby land uses.

12. **Off-Street Loading Purpose.** The regulation of loading spaces in these zoning regulations is to alleviate or prevent congestion of the public right-of-way so as to promote the safety and general welfare of the public, by establishing minimum requirements for off-street loading and unloading from motor vehicles in accordance with the specific and appropriate utilization of various parcels of land or structures.

13. **Location.**

a. All required loading berths shall be off-street and located on the same lot as the building or use to be served.

b. All loading berth curb cuts shall be located at a minimum fifty (50) feet from the intersection of (2) two or more street rights-of-way. This distance shall be measured from the property line.

c. Loading berths shall not occupy the required front yard setbacks.

d. Loading berths located at the front or at the side of buildings on a corner lot shall require a conditional use permit.

1) Loading berths shall not conflict with pedestrian movement.

2) Loading berths shall not obstruct the view of the public right-of-way from off-street parking access.

3) Loading berths shall comply with all other requirements of this Section.

e. Each loading berth shall be located with appropriate means of vehicular access to a street or public alley in a manner which will cause the least interference with traffic both on and off site.

f. No loading berth shall be located closer than one hundred (100) feet from a residential district unless within a structure.

14. **Surfacing.** All loading berths and access ways shall be improved with not less than six (6) inch class five base and two (2) inch bituminous surfacing to control the dust and drainage according to a plan submitted to and subject to the approval of the City Engineer.

15. **Accessory Use, Parking and Storage.** Any space allocated as a required loading berth or access drive so as to comply with the terms of these zoning regulations shall not be used for the storage of goods, inoperable vehicles, or snow, and shall not be included as part of the space requirements to meet off-street area.

16. **Screening.** Except in the case of multiple family dwellings, all loading areas shall be screened and landscaped from abutting and surrounding residential uses and/or the public right-of-way in compliance with Section 401.15.E. of this Ordinance.

17. **Size.**

a. Non-Residential Developments. Unless otherwise specified in these zoning regulations, the first loading berth shall be not less than seventy (70) feet in length and additional berths required shall be not less than thirty (30) feet in length and all loading berths shall be not less than ten (10) feet in width and fourteen (14) feet in height, exclusive of aisle and maneuvering space.

b. Multiple Family Dwellings. The size and location of the required loading berth shall be subject to the review and approval of the Zoning Administrator.

18. **Number of Loading Berths Required.** The number of required off-street loading berths shall be as follows:

a. Commercial and Industrial Uses. All buildings shall have at least one off-street loading berth. Buildings which are ten thousand (10,000) square feet or more, shall have at a minimum two (2) loading berths.

b. Multiple Family Dwellings. One (1) off-street loading berth shall be provided for each principal dwelling structure in excess of four (4) units.

c. Other Uses. Other uses not specifically mentioned herein or unique cases shall be determined on an individual basis by the City Council. Factors to be considered in such determination shall include (without limitation) size of buildings, type of use, and expected frequency and number of delivery or service vehicles.

d. Space Reductions. Subject to the review and processing of a conditional use permit as regulated by Section 401.03 of this Ordinance, the City may reduce the number of required off-street loading spaces when the use can demonstrate in documented form a need which is less than required. In such situations, the City may require land to be reserved for loading space development should use or needs change.

[12, 17, 36] **401.15.G. Signs.**

401.15.G.1. **FINDINGS, PURPOSE AND EFFECT:**

a. **Findings: The City finds:**

1) Oak Park Heights is located on the Minnesota and Wisconsin border with the St. Croix River separating the two states. Upon completion of the St. Croix River Crossing in the fall of 2016, Highway 36 will provide an increasingly important connection between the Twin Cities metropolitan area and western Wisconsin. The result will be growth in the Oak Park Heights business community and a continuing need for signage and advertising devices.

2) The City Code has included the regulation of signs in an effort to provide adequate means of expression and to promote the economic viability of the business community, while protecting the City and its citizens from a proliferation of signs of a type, size, location and character that would adversely impact the aesthetics of the community and threaten the health, safety and welfare of the community. The regulation of physical characteristics of signs within the City has had a positive impact on traffic safety and the overall appearance of the community.

b. **Purpose and intent:** It is not the purpose or intent of this sign ordinance to regulate the message displayed on any sign; nor is it the purpose or intent of this ordinance to regulate any building design or any display not defined as a sign, or any sign which cannot be viewed from outside a building. The purpose and intent of this ordinance is to:

1) Regulate the number, location, size, type, illumination and other physical characteristics of signs within the City in order to promote the public health, safety and welfare.

2) Maintain, enhance and improve the aesthetic environment of the City by preventing visual clutter that is harmful to the appearance of the community.

3) Improve the visual appearance of the City while providing for effective means of communication, consistent with constitutional guarantees and the City's goals of public safety and aesthetics.

4) Provide for fair and consistent enforcement of the sign regulations set for herein under the zoning authority of the City.

401.15.G.2. **SUBSTITUTION CLAUSE**: The owner of any sign which is otherwise allowed by this sign ordinance may substitute non-commercial copy in lieu of any other commercial or non-commercial copy. This substitution of copy may be made without any additional approval or permitting. The purpose of this provision is to prevent any inadvertent favoring of commercial speech over non-commercial speech, or favoring of any particular non-commercial message over any other non-commercial message. This provision prevails over any more specific provision to the contrary.

401.15.G.3 **CONFLICT WITH ZONING ORDINANCE.** If there is a conflict that occurs between this Section and other provisions of this Ordinance, as amended, the conditions as set forth in this Section, as amended, shall prevail.

401.15.G.4. **GENERAL PROVISIONS.**

a. **Traffic Signs.** No sign permitted by this Ordinance shall, by reason of its location, color or intensity, create a hazard to the safe, efficient movement of vehicular or pedestrian traffic. No private sign shall contain words which might be construed as traffic controls, such as “stop”, “caution”, “warning”, etc., unless such sign is needed to direct traffic on the premises.

b. **Signs on Fences, Poles, and Natural Features.** No signs, guys, stays or attachments shall be erected, placed or maintained on rocks, fences, or trees, nor interfere with any electric light, power, telephone or telegraph wires or the supports thereof, with the exception of signs necessary for security, or to preserve public safety, as determined by the City Council.

c. **Wall/Roof Attachments.** No sign shall be attached to hang from any building until all necessary wall and/or roof attachments have been approved by the Building Official.

d. **Right-of-Way, Public Lands and Easements.** No signs other than governmental signs shall be erected or temporarily placed within any street rights-of-way or upon any public lands or easements or rights-of-way.

e. **Ingress/Egress.** No sign or sign structure shall be erected or maintained if it prevents free ingress or egress from any door, window, or fire escape. No sign or sign structure shall be attached to a stand pipe or fire escape.

f. **Property Number.** A minimum of one (1) sign, as assigned by the City, shall be required on each principal building in all districts. Such sign shall be of sufficient size to be legible from the nearest street yet shall not exceed nine (9) square feet in area. The numbers shall be metal, glass, plastic or durable material and the numbers shall not be less than three and one-half (3.5) inches in height, in a contrasting color to the base or made of some reflective material and so placed to be easily seen from the street.

g. **Sign Maintenance.** Signs and sign structures shall be properly maintained and kept in a safe condition. Sign or sign structures which are rotted, unsafe, deteriorated or defaced, as determined by the City Building Official shall be removed, repainted, repaired, or replaced by the permit holder, owner or agent of the property upon which the sign stands.

h. **Electrical Building Code.** All signs shall be constructed in accordance with the Minnesota State Building Code and the National Electrical Code. All electrical service wiring shall be buried.

i. **Hours of Operation.** Signs in the R-B, B-1, B-2, B-3, B-4, B-W, and I Districts may only be illuminated during business hours, or until eleven o'clock (11:00) PM, whichever is later.

j. **External Lighting.** Signs with external lighting shall have no exposed light sources or fixtures unless decorative fixtures are utilized and the light source is fully concealed and diffused. The maximum brightness of the signs in combination with the building and site lighting shall not exceed the standards found in Section 401.15.B.7 of this Ordinance.

k. **Internal Lighting.** Signs with internal lighting shall include illumination of only the text and/or logo portion of the message. Back lighting of signage on fabric awnings is prohibited.

l. **Neon.** Neon signs shall be limited to channel letter signs, logos, and permanent window signage in the R-B, B-1, B-2, B-3, B-4, B-W and I Districts.

m. **Setbacks.** No part of a sign or sign structure shall be placed closer to the property line than five (5) feet. No sign shall be positioned so that it impacts or is exposed to residential uses or districts along adjoining side and rear yard property lines.

n. **Flags.** No more than three (3) flags may be displayed outside of a building. This number may, however, be increased provided an interim use permit is issued in compliance with Section 401.05 of this Ordinance. Where appropriate, the U.S. Flag Code, Minnesota Statutes or Executive Order shall apply to Federal and/or State flag displays.

o. **Angle Signs.** The maximum angle permitted between faces of a double face freestanding sign is sixty (60) degrees, anything less is one (1) sign, anything more is two (2) signs.

401.15.G.5. **PERMITTED SIGNS IN ANY ZONING DISTRICT.** The following signs are allowed without a permit unless otherwise specified. These signs, if placed in accordance with the following standards, will not apply toward the maximum allowable sign area, but shall comply with all other applicable provisions of this Ordinance.

a. **Campaign Non-Commercial Speech Signs**. All campaign non-commercial signs no more than sixteen (16) square feet in size and totaling no more than four (4) per property may be posted beginning forty six (46) days before the state primary in a state general election year until ten (10) days following the state general election, in accordance with Minnesota State Statutes, as amended.

b. **Signage on bus benches, as regulated in the Oak Park Heights Code of Ordinances**. For the purposes of this Ordinance, such signage shall not be considered to be off-premises advertising signage.

c. **Permanent Window Signage**. Shall not exceed twenty-five (25) percent of the total area of the window in which they are displayed. Lettering used in permanent window signage exceeding three and one-half (3.5) inches in height shall be included in the calculations of allowable sign area permitted on that side of the building. Use of neon for permanent window sign shall be allowed within the requirements of this Section.

d. **Temporary Window Signs**. Temporary window signs shall be permitted within the R-B, B-1, B-2, B-3, B-4, B-W and I Districts, provided that they do not exceed ten (10) percent of the front building facade.

e. **Additional Allowed Signs.**

1) One (1) nameplate or address sign for each unit in a single and two family residential dwelling not exceeding two (2) square feet in area per surface. Lots abutting more than one (1) right-of-way shall be allowed one (1) sign not to exceed two (2) square feet in area per frontage.

2) One nameplate or address sign, placed on the wall of the structure, for each dwelling group of three or more units or commercial business. The sign may not exceed six (6) square feet in area. Lots abutting more than one (1) right-of-way shall be allowed one (1) sign not to exceed six (6) square feet in area per frontage.

3) One sign shall be allowed per street frontage when the building or site is under construction or offered for sale or lease, provided that:

a) The area of the sign shall not exceed thirty two (32) square feet.

b) Freestanding signs shall be limited to a maximum height of eight (8) feet.

c) The sign shall not be illuminated.

d) Such sign shall be removed within one year of the date of issuance of a building permit or when the project is completed, whichever is sooner.

4) Upon approval of a final plat for a subdivision provided that:

a) One (1) sign shall be allowed per project or subdivision or one (1) sign for each frontage to a major collector or arterial street, whichever is greater.

b) The area of the sign shall not exceed thirty two (32) square feet.

c) Freestanding signs shall be limited to a maximum height of eight (8) feet.

d) Such sign shall be removed within one year of the date of issuance of a building permit or when the project is completed, whichever is sooner.

401.15.G.6. **PROHIBITED SIGNS IN ANY ZONING DISTRICT.** The following signs are prohibited in all zoning districts:

a. Any sign that will obstruct or impair the vision of drivers or pedestrians or detract from the visibility of any official traffic control device.

b. Any sign which contains or imitates an official traffic sign or signal.

c. Off-premises signs.

d. Business signs on, or attached to equipment, such as semi-truck trailers, being used in such a manner that advertising is a principal use of the equipment.

e. Animated signs.

f. Roof signs.

g. Signs displayed on vehicles within open sales lots.

h. Any sign or display which contains or consists of banners, bannerettes, pennants, ribbons, streamers, strings of light bulbs, balloons and hot or cold air inflatable devices, spinners or similar outdoor advertising devices, except

as may be approved by a special event permit in accordance with the provisions as set forth in Section 401.15.G.7 of this Ordinance.

i. Portable signs.

j. Wall graphics.

k. Beacons.

l. Multi-faced signs.

m. Signs supported by guy wires.

n. Cabinet signs on buildings, except for logo signs.

o. Signs and/or posts which are tacked onto trees, fences, utility poles or other such permanent supports, except safety signs and signs found on fences of athletic facilities

p. All signs over four hundred (400) square feet in area.

33 q. Dynamic display signs.

33 r. Electronic graphic display signs.

33 s. Multivision signs

33 t. Video display signs.

36 401.15.G.7. **SPECIAL EVENTS.**

a. **Sign Permit Required**. No special event shall be held without first obtaining a sign permit.

19 22 b. **Number of Events**. The business or applicant in all business and industrial zoning districts, as well as each public and institutional use in residential districts (except for the areas within the Destination Retail Highway District as indicated in Section 401.15.G.7.c), shall be a total of fifty (50) special event days in a calendar year. Once the time period has expired for a special event, the applicant shall wait the same number of days that the sign permit was issued to start a new special event.

22 c. **Events in the Destination Retail Highway District.** The business or applicant in the Destination Retail Highway District shall be allowed a total of one hundred eighty (180) special event days in a calendar year for any applicant, business, or public and institutional use. Once the time period has

expired for a special event, the applicant shall wait two (2) days before starting a new sales event. All other special event requirements, as found in Section 401.15.G.7 of this Ordinance, shall be adhered to within the Destination Retail Highway District.

d. **Permitted Signs and Displays**. The signs and displays described below are permitted for special events in addition to the maximum allowable sign area, provided they are professionally done and the following standards are met and complied with:

1) Balloons.

2) Tents.

31 3) Bannerettes and Pennants.

4) Banners.

5) Search lights.

a) Search lights as regulated in Section 401.15.B.7.g.1) of this Ordinance.

36 6) Ribbons, Streamers and Air Inflatable Devices – limited to three (3) special event days per calendar year, each no longer than ten (10) days per event.

e. **Prohibited Signs and Displays for Special Events**. The signs or displays described below are prohibited for special events:

31, 33 1) Animated signs, dynamic display signs, electronic graphic display signs, Multivision signs, video display signs, light bulb strings, and portable signs.

2) Displays or special features on any landscaped areas or on roofs.

3) Aerial rides.

4) Additional lighting that does not meet this Ordinance.

5) Any sign or display in the public right-of-way.

f. **Sign Permit Requirements for Special Event Lot Decorations**. Before any special event signs or decorations shall be permitted to be used for an event, the responsible property owner or organization shall submit a completed application for a sign permit with the City. In addition to other requirements, the applicant shall show that when the event is held, adequate

parking area will continue to exist, even though a portion of required parking spaces may be used to celebrate the event. Only after the City issues the sign permit, may a business display the special event signs and decorations.

g. **Violations**.

1) It is a violation for any person, company, or organization to provide, erect or display any beacons, balloons or other advertising device which is not in conformity with the provisions of this Section.

2) Special event signs and decorations not removed by the last day of the special event.

401.15.G.8. **DISTRICT REGULATIONS.**

a. **R-1, R-1A, R-1B, R-1C, Single Family Residential and R-2, Low to Medium Density Residential Districts**. Except as otherwise provided in this Ordinance, signs in these districts shall be limited to:

1) Any multiple dwelling structure with three (3) or more units shall be allowed one (1) monument sign, not to exceed six (6) feet in height or one (1) wall sign, the aggregate square footage of sign space shall not exceed thirty-two (32) square feet.

2) Other non-residential uses permitted or conditionally permitted in the R-1, R-1A, R-1B, R-1C, and R-2 Districts shall be allowed one monument sign, not to exceed eight (8) feet in height and one (1) wall sign, the aggregate square footage of sign space shall not exceed forty (40) square feet. The signs shall not be illuminated except by conditional use permit as provided for in Section 401.03 of this Ordinance.

3) One (1) freestanding sign, not to exceed six (6) feet in height or one (1) wall sign, the aggregate square footage of sign space shall not exceed four (4) square feet shall be allowed for home occupations as provided for in Section 401.15.M of this Ordinance, and day care nursery facilities as provided for in Section 401.15.N of this Ordinance. The sign shall not be illuminated except by conditional use permit as provided for in Section 401.03 of this Ordinance.

4) One (1) freestanding sign, not to exceed six (6) feet in height or one (1) wall sign, the aggregate square footage of sign space shall not exceed six (6) square feet shall be allowed for bed and breakfast facilities as provided for in Section 401.22.E.3 of this Ordinance. The sign shall not be illuminated except by conditional use permit as provided for in Section 401.03 of this Ordinance.

6) Exceptions in numbers of height or size of signs may be allowed for the signs indicated in Section 401.15.G.9 of this Ordinance by conditional use permit, as provided for in Section 401.03 of this Ordinance.

b. **O, Open Space Conservation and R-3, Multiple Family Residential Districts**. Except as otherwise provided in this Ordinance, signs in these districts shall be limited to:

1) Any multiple family structure with three (3) or more units shall be allowed a total of four (4) signs for any one (1) project to include the following:

a) One (1) monument sign per entrance to the project not to exceed twenty-four (24) square feet or eight (8) feet in height.

b) Wall signs not more than twenty-four (24) square feet nor higher than the top on the parapet wall or eave.

2) Other non-residential uses permitted or conditionally permitted in the O, Open Space Conservation or R-3, Multiple Family Residential Districts shall be allowed one monument sign, not to exceed eight (8) feet in height and one (1) wall sign, the aggregate square footage of sign space shall not exceed forty (40) square feet.

3) Parks or public facilities shall be allowed one (1) monument sign per street entrance, not to exceed eight (8) feet in height and one (1) wall sign. The aggregate square footage of sign space shall not exceed sixty (60) square feet.

36 4) Changeable Copy Signs – Manual and Electronic – Non-Residential Uses in the O, Open Space Conservation District as regulated in Section 401.15.G.10 of this Ordinance.

36 5) Exceptions in numbers of, height or size or signs may be allowed for the signs indicated in Section 401.15.G.8 of this Ordinance by conditional use permit, as provided for in Section 401.03 of this Ordinance.

c. **P/I, Public Institutional; R-B, Residential Business; and B-1, Neighborhood Business Districts**. Except as otherwise provided in this Ordinance, signs in these districts shall be limited to three (3) signs per principal use upon the subject property, subject to the following conditions:

1) One (1) freestanding monument sign per entrance not more than forty (40) square feet or more than eight (8) feet in height;

2) Wall signs not more than forty (40) square feet nor higher than the top of the parapet wall or eave.

3) Parks or public facilities shall be allowed one (1) monument sign per street entrance, not to exceed eight (8) feet in height, and one (1) wall sign. The aggregate square footage of sign space shall not exceed sixty (60) square feet.

36 4) Changeable Copy Signs – Manual and Electronic – P/I, Public Institutional District as regulated in Section 401.15.G.10 of this Ordinance.

5) Exceptions in numbers of, height or size of signs may be allowed for the signs indicated in Section 401.15.G.8 of this Ordinance by conditional use permit, as provided for in Section 401.03 of this Ordinance.

36 d. **B-2, General Business; B-3, Highway Business and Warehousing; B-4, Limited Business District; and I, Industrial Districts**. Except as otherwise provided in this Ordinance, single occupancy business signs in these districts shall be limited to:

1) Freestanding Signs.

a) Size of sign permitted is determined by the gross square footage of the principal structure located in the development.

b) A maximum of one (1) freestanding sign is allowed upon any single lot. The freestanding sign base shall be surrounded with a landscape planter at least three (3) feet in height and constructed of materials to match the principal building. The planter shall contain decorative shrubbery and/or flower materials.

c) Two (2) additional freestanding signs may be allowed provided they are in compliance with the following standards:

(1) The signs are constructed as a monument.

(2) Decorative shrubbery and/or flowers must be incorporated as a part of the monument design and are maintained on a regular basis.

d) The following table lists the maximum size and heights for permitted signs in the B-2 District, B-3 District, B-4 District, B-W District and I District:

	Pylon		Monument	
Principal Structure (Gross Square Feet)	Height (Feet)	Sign Size (Square Feet)	Height (Feet)	Copy & Graphic (Square Feet)
Multiple Occupancy Business Buildings	20	100	20	100
Destination Retail Highway District	40	200	20	100
Greater than 200,000	30	150	20	100
100,000 – 200,000	25	120	20	100
10,000 – 100,000	20	100	20	100
5,000 – 10,000	18	80	15	80
Less than 5,000	15	60	8	60

2) Wall Signs.

Wall Signs.

a) Size of sign permitted is determined by the gross square footage of the principal structure located in the development.

b) The maximum number of wall signs on any principal building shall be three (3), and in all cases, each sign shall be placed on a separate building facade, with or without street frontage except as allowed for multiple occupancy buildings in Section 401.15.G.9.d of this Ordinance.

c) The maximum number of wall signs allowed may be increased over three (3) by conditional use permit for single occupancy buildings provided the following minimum standards are met:

(1) There shall be no freestanding sign exceeding twenty (20) feet in height upon the lot.

(2) The wall signs shall be identical in style, color and size.

d) The following table lists the maximum size and heights for permitted signs in the B-2 District, B-3 District, B-4 District, B-W District and I District:

Principal Structure (Gross Square Feet)	Individual Wall Sign Calculation	Total Wall Signage For Property
Multiple Occupancy Business Buildings	200 square feet or 10 percent of the wall face, whichever is less	500 square feet
Destination Retail Highway District	250 square feet or 10 percent of the wall face, whichever is less	500 square feet
Greater than 200,000	200 square feet or 10 percent of the wall face, whichever is less	500 square feet
100,000 – 200,000	150 square feet or 10 percent of the wall face, whichever is less	400 square feet
10,000 – 100,000	120 square feet or 10 percent of the wall face, whichever is less	300 square feet
5,000 – 10,000	100 square feet or 15 percent of the wall face, whichever is less	200 square feet
Less than 5,000	80 square feet or 15 percent of the wall face, whichever is less	150 square feet

3) Changeable Copy Signs – Manual and Electronic as regulated in Section 401.15.G.10 of this Ordinance.

4) Exceptions in numbers of, height or size of signs may be allowed for the signs indicated in Section 401.15.G.8 of this Ordinance by conditional use permit, as provided for in Section 401.03 of this Ordinance.

401.15.G.9. **SPECIAL DISTRICT PROVISIONS.**

a. **Motor Fuel Station**.

1) Signs for motor fuel stations shall be regulated by the single occupancy business structure sign provisions for the zoning district in which the station is located.

2) Pump island signs shall not exceed two (2) square feet per pump.

3) Portable signs shall not be allowed.

4) The area of all displays and/or signs shall be counted against the total sign area allowed for the site, which includes both freestanding and wall sign allowances.

b. **Destination Retail Highway Sign District**. Signs and sign allowances, in addition to the sign allowances for single and multiple occupancy signs of this Ordinance, shall be allowed within the Destination Retail Highway Sign District as identified on maps on file at City Hall.

c. **Multiple Occupancy Business Buildings, Industrial Buildings, and Lots**.

1) When a single principal building is devoted to two (2) or more businesses or industrial uses, or a lot will contain more than one (1) single occupancy building as part of an approved planned unit development, a comprehensive sign plan shall be required subject to review as to whether the plan is consistent with the sign regulations. The plan and sign allowances shall be subject to the following:

a) A comprehensive sign plan is submitted which includes all of the following information:

(1) A site plan to scale showing the location of lot lines, building structures, parking areas, existing and proposed signs, and any other physical features of the area included within the comprehensive sign plan.

(2) Elevations to scale of building or buildings included within the comprehensive sign plan including the location of existing or proposed wall signs.

(3) To scale plans for all existing and proposed signs of an type included within the comprehensive sign plan indicating area, dimensions, height, materials, colors, and means of illumination (if any).

2) The maximum individual sign sizes for multiple occupancy buildings and individual businesses that may display a sign shall not exceed the maximum provisions for single occupancy structures of the applicable zoning district.

3) Except as provided for in Section 401.15.G.9 of this Ordinance, individual tenants of a multiple occupancy building shall not display separate wall signs unless the tenants business has an exclusive exterior entrance. The number of individual wall signs shall be limited to one (1) per entrance, and each sign shall be limited to the

maximum wall sign allowances permitted in the district. Tenants on building ends may have a maximum of two (2) signs each to be located at the front and side elevations of the tenant space. The individual signs shall be located only on exterior walls which they are directly related to the use being identified.

4) In any multiple occupancy building qualifying as a shopping center, signs shall be permitted for each common public entrance. Each sign area shall not exceed a total of fifty (50) square feet and shall be located within fifty (50) feet of the common public entrance being served. Attention shall be given to the possible number of tenants or occupant bays which may be served by the common public entrance for which the sign is intended.

5) No permit shall be issued for a new or replacement sign for an individual use except upon a determination by the Zoning Administrator that it is consistent with the approved comprehensive sign plan.

[36] 401.15.G.10. **CHANGEABLE COPY SIGNS.**

a . **Manual and Electronic Changeable Copy Sign.**

1) One manual or electronic changeable copy sign shall be allowed per site provided that the changeable copy area is integrated into the allowed sign and subject to the following:

a) Changeable copy signs shall only be on freestanding signs.

b) The sign shall not directly face a residentially zoned property and shall be set back at least fifty (50) feet from any side or rear lot line abutting a residential district.

c) The changeable copy portion of the sign shall not occupy more than thirty-five (35) percent of the actual copy and graphic area of the sign.

d) The sign message shall not change less than every ten (10) seconds. Hour, minute, date or temperature shall change not less than every three (3) seconds.

b. **Electronic Sign Illumination.**

1) Electronic signs shall be shielded to prevent lights from being directed at oncoming traffic in such brilliance that it impairs the vision of the driver and may not interfere with or obscure traffic signs or signals.

Lighting may not illuminate any adjacent properties, buildings or streets.

2) No sign incorporating LED lighting may be illuminated in any way so as to exceed a maximum intensity of five thousand (5,000) nits during daylight hours or five hundred (500) nits from sunset to sunrise measured at the sign face at maximum brightness.

3) Signs using fluorescent, neon or incandescent light sources shall not exceed twelve (12) watts per square foot of sign surface area.

4) All signs incorporating LED lighting installed shall be equipped with a mechanism that automatically adjusts the brightness to ambient lighting conditions to conform to the requirements of this subsection.

5) The owner of any LED illuminated sign shall provide certification as to compliance with these subsections and 401.15.G.5 of this Ordinance upon request by the zoning administrator.

401.15.G.11. **NON-CONFORMING SIGNS.**

a. **General Provisions Governing Non-Conforming Signs.**

1) Continuation of Use. A non-conforming sign lawfully existing upon the effective date of this Ordinance may be continued at the size and in the manner existing upon such date.

2) If any property use or business changes ownership, all signs on that property, including any sign identifying a business no longer in existence, shall be brought into conformance with Section 401.15.G.15.c) within thirty (30) days.

3) Prohibitions. A non-conforming sign may not be:

a) Structurally altered except to bring it into compliance with the provisions of this Ordinance.

b) Enlarged.

c) Re-established after its removal or discontinuance.

d) Repaired or otherwise restored, unless the damage is less than fifty (50) percent of sign structure.

e) Replaced.

4) Non-Conforming Sign Maintenance and Repair. Nothing in this Ordinance shall be construed as relieving the owner of use of a legal non-conforming sign or owner of the property on which the legal non-conforming sign is located from the provisions of this Ordinance regarding safety, maintenance, and repair of signs, provided, however, that any repainting, cleaning, and other normal maintenance or repair of the sign or sign structure shall not modify the sign structure or copy in any way which makes it more non-conforming or the sign shall lose its legal non-conforming status.

b. **Non-Conforming Uses**. When the principal use of land is legally non-conforming under the Zoning Ordinance, all existing or proposed signs in conjunction with that land shall be considered conforming if they are in compliance with the sign provisions for the most restrictive zoning district in which the principal use is allowed.

401.15.G.12. **MAINTENANCE**. All signs, together with all of their supports, braces, guys and anchors, shall be kept in repair and in proper state of preservation. The display surfaces of all signs shall be kept neatly painted or posted at all times. Every sign and the immediate surrounding premises shall be maintained by the owner or person in charge thereof in a clean, sanitary, and inoffensive condition and free and clear of all obnoxious substances, rubbish and weeds. Notice shall be given to the Zoning Administrator of any change in sign user, sign owner, or owner of the property on which the sign is located.

401.15.G.13. **INSPECTION.** All signs for which a sign permit is required shall be subject to inspection by the City Building Official. The Building Official may order the removal of any sign that is not maintained in accordance with the maintenance provisions of this Ordinance.

401.15.G.14. **SIGN PERMIT AND APPLICATION.**

a. **Sign Permit Required**. Except as provided in this Section, no sign or structure shall be erected, constructed, altered, rebuilt, or relocated until a sign permit has first been issued by the City. The fees which shall be charged for sign permits under this Section shall be in accordance with the fee schedule as determined by resolution of the City Council.

b. **Sign Application**. The following information for a sign permit shall be supplied by an applicant as requested by the Zoning Administrator or designee:

1) Name, address, and telephone number of person making the application.

2) Name, address, and telephone number of person owning the sign.

3) A site plan to scale showing the location of lot lines, building structures, parking areas, existing and proposed signs and any other physical features.

4) The location, diagrams, and dimensions of the building, building elevations, structure, and lot to which, or upon which, the sign is to be attached or erected. Building elevations shall include an artist's rendition or color computer graphic simulation if required by the Zoning Administrator.

5) A site plan showing the positioning and height of the sign(s) or other advertising structures in relation to all nearby existing or proposed buildings, structures, and property lines, lighting details, colors, materials, a table of the proposed gross sign area for each sign and the total proposed sign area.

6) Photographs of the building face and the building faces of any adjacent buildings.

7) Plans, location and specifications and method of construction and attachment to the buildings or placement method in the ground.

8) Copy of stress sheets and calculations showing that the structure is designed for dead load and wind pressure in any direction in the amount required by this and all other laws and ordinances of the City.

9) Written consent of the owner or lessee of any site on which the sign is to be erected.

10) Any electrical permit required and issued for the sign.

11) The name of the person, firm, corporation, or association erecting the structure.

12) Such other information as the Zoning Administrator or designee requires, showing full compliance with this and all other laws and ordinances of the City.

13) If the work authorized under a sign permit has not been completed within twelve (12) months after the date of its issuance, said permit shall become null and void.

401.15.G.15. **REMOVAL OF UNSAFE AND ILLEGAL SIGNS.** If the Zoning Administrator or designee finds that any sign or sign structure is unsafe or in violation of the provisions of this Ordinance, written notice shall be given to the owner and/or party responsible for the sign to comply with the standards required by

this Section in a prescribed time frame and manner. The removal of the signs shall be done in the following manner:

a) **Permanent Illegal Signs**. The Zoning Administrator, or his/her designee, shall order the removal of any permanent sign erected or maintained in violation of this Ordinance. Those signs deemed unsafe by the Zoning Administrator or designee shall be ordered removed immediately. Thirty (30) days notice in writing shall be given to the owner of all other signs or of the building, structure, or premises on which such sign is located, to either comply with this Ordinance or remove the sign. The owner of the sign, building, structure, or premises shall also, upon removal of any sign, be fully responsible for repairing, replacing, and returning the ground, building wall, or other mounting surface to its original condition or to a proper condition consistent with the present appearance of the area, building wall, or surface.

b) **Temporary Illegal Signs**. The City may impound signs which have been illegally installed upon public property or within public right-of-way or easement. The sign owner may retrieve the signs according to the following:

1) Fee Payment. For impounded signs, there shall be an impoundment and storage fee, as may be approved from time to time by Council resolution.

2) Retrieval of Sign. The sign shall be retrieved from a designated impound area during routine business hours and within fifteen (15) days from the date of impounding. After fifteen (15) days, the City will dispose of the sign.

3) Liability. The City shall not be held liable for any damage to impounded signs.

c) **Out of Business Signs**. Signs not used for signing when a business permanently closes or leaves the tenant space shall be removed or altered within thirty (30) days from the close of business. Wall or freestanding signs and sign structures that are in compliance with the provisions of this Ordinance but are not in use shall be addressed in the following manner:

1) Wall signs. The sign shall be removed.

2) Wall signs (cabinet). A blank face shall be inserted in the cabinet.

3) Freestanding Signs. The sign area shall be totally covered.

4) Non-Conforming Signs/Sign Structures. All non-conforming signs and sign structures shall be removed in compliance with Section 401.15.G.11 of this Ordinance.

d) **Administrative Enforcement.** Enforcement procedures for violations of this Chapter shall be conducted as outlined in Section 101.05 of the City Code.

401.15.G.16. **VARIANCES.** In order to provide additional flexibility in the enforcement of this Ordinance and to alleviate hardship and injustice, the City Council may, upon application, grant a variation from the terms of this Ordinance. Upon application, therefore, from the person seeking a permit for the erection or installation of a sign, the request for variance shall be processed in accordance with Section 401.04 of this Ordinance, as may be amended.

a. **Criteria**. Additionally, the City Council shall make a finding of fact that an undue hardship or injustice exists if a variance was not granted and therefore, may grant such variations based upon consideration of the following:

1) That particular physical surrounding, shape, or topographical conditions of the specific parcel of land involved exist.

2) That the condition involved is unique to the particular parcel of land involved.

3) That the purpose of the variation is not based exclusively upon a desire to increase the value of income potential of the business involved.

4) That the alleged difficulty or hardship is caused by this Ordinance and has not been created by any persons presently having an interest in the parcel.

5) That the granting of the variation will not be detrimental to the public welfare or injurious to other land or improvements in the neighborhood.

6) That the proposed variation will not impair an adequate supply of light and air to adjacent property, or substantially increase the congestion of the public streets or interfere with the function of the Police and Fire Departments of the City.

b. **Fees**. Fees for the review and processing of sign permit variance requests shall be changed in accordance with the provisions of Section 401.08 of this Ordinance.

401.15.H. Site/Building Plan Review.

1. **Purpose.** The purpose of this section is to establish a formal plan review procedure and provide regulations pertaining to the enforcement of site design and construction standards as agreed to by the contractor through the officially submitted plan documents.

2. **Plan Required.** In addition to other plan requirements outlined in this Ordinance, site and construction plans will be required and shall be submitted to and approved by the Building Official prior to the issuance of any building permit.

3. **Plan Review/Approval.** Except in the case of individual single family uses and minor projects, additions or alterations as determined by the Zoning Administrator and all building and site plans shall be subject to review by the City Council.

4. **Plan Agreements.** All site and construction plans officially submitted to the City shall be treated as a formal agreement between the building contractor and the City. Once approved, no changes, modifications or alterations shall be made to any plan detail, standard or specifications without prior submission of a plan modification request to the Building Official for review and approval.

5. **Enforcement.** The Building Official shall have the authority to order the stopping of any and all site improvement activities, when and where a violation of the provisions of this section has been officially documented by the Building Official.

401.15.I. Land Reclamation.

[1] 1. **Permit Required.** Except for governmental jurisdiction, in cases where a grading and drainage plan for a private development has been approved as part of a subdivision or other development, or as may be otherwise stipulated by this Ordinance, any person who proposes to add landfill in excess of fifty (50) cubic yards or mine material in excess of fifty (50) cubic yards or as allowed within Section 401.34 of the shoreland regulations to any property within the City limits, shall apply to the City for landfill permit. Notwithstanding the requirements of this Section, no permit will be required for depositing landfill on a lot for which a building permit has been issued for construction thereof provided that there is compliance with Section 401.15.B. of this Ordinance.

2. **Application and Required Information.** Any person desiring a permit hereunder shall present an application on such forms as shall be provided by the Zoning Administrator. Such application shall be accompanied by five (5) large scale copies and one (1) reduced scale 8-1/2" by 11") copies of detailed written and graphic materials fully explaining the proposed land filling operation. The scale of such materials shall be the minimum necessary to ensure legibility. The request shall be considered as being officially submitted when all the following information has been submitted:

a. The name and address of the applicant.

b. The name and address of the owner of the land.

c. The address and legal description of the land involved.

d. The purpose of the landfill.

e. A description of the source, type and amount of fill material to be placed upon the premises.

f. The highway, street or streets, or other public ways in the City upon and along which any material is to be hauled or carried.

g. An estimate of the time required to complete the landfill or mining operation.

h. A site plan showing present topography and also including boundary lines for all properties, water courses, wetlands and other significant features within three hundred fifty (350) feet.

i. A site plan showing the proposed finished grade and landscape plan. Erosion control measures shall be provided on such plan. Final grade shall not adversely affect the surrounding land or the development of the site on which the landfill is being conducted. Top soil shall be of a quality capable of establishing normal vegetative growth.

j. A plan and/or statement demonstrating the proposed activity will in no way jeopardize the public health, safety and welfare or is appropriately fenced to provide adequate protection.

k. A statement that the applicant will comply with all conditions prescribed by the City.

l. The application shall be considered as being officially submitted when all the information requirements are complied with. A fee for such application is submitted based upon the schedule as established by City Council resolution.

m. A written right-of-entry is provided to the City and/or its officers to enter the land for the purpose of determining compliance with all applicable conditions imposed on the operation.

[1] 3. **Technical Reports.** The Zoning Administrator shall process all landfill permit Administrator and all those for more than fifty (50) cubic yards or as required in Section 401.34 of the shoreland regulations shall be forwarded to the City Engineer and Building Official. Where watersheds, floodplains and/or wetlands are in

question, the Minnesota Department of Natural Resources shall also be contacted. These technical advisors shall be instructed by the Zoning Administrator to prepare reports for the City Council.

4. **Issuance of Permit.** Upon receiving information and reports from the City staff and other applicable agencies, the City Council shall make its determination as to whether, and when, and under what conditions such permit for a landfill or mining operation greater than fifty (50) cubic yards is to be issued to the applicant by the Zoning Administrator.

5. **Conditions of Operation.**

   a. Under no circumstances shall any such landfill operation be conducted or permitted if the contents of the landfill or any part thereof shall consist of garbage, animal or vegetable refuse, poisons, contaminants, chemicals, decayed material, filth, sewage or similar septic or biologically dangerous material or any other material deemed to be unsuitable by the City.

   b. Unless expressly extended by permit, the hours of operation shall be limited to 7:00 AM to 6:00 PM, Monday through Friday.

   c. Each site shall have graveled roads, access drives, and parking areas of sufficient width and length to prevent sediment from being tracked onto public or private roadways. Any sediment reaching a public or private road shall be removed by street cleaning (not flushing) before the end of each work day.

6. **Security.** The City Council may require either the applicant or the owner or user of the property on which the landfill or mining operation is occurring to post a security in such form and sum as the Zoning Administrator, City Attorney, and/or City Engineer shall determine, with sufficient surety provided to the City, conditioned to pay to the City the extraordinary cost and expense of repairing, from time to time, any highways, streets or other public ways where such repair work is made necessary by the special burden resulting from hauling and travel in transporting fill material, the amount of such costs and expense to be determined by the City Engineer; and conditioned further to comply with all requirements of this section, and the particular permit, and to pay any expense the City may incur by reason of doing anything required to be done by any applicant to when a permit is issued.

7. **Failure to Comply.** The City may, for failure of any person to comply with any requirement made of them in writing under the provisions of such permit, as promptly as same can reasonably be done, proceed to cause said requirement to be complied with, and the cost of such work shall be taxed against the property whereon the landfill is located, or the City may at its option proceed to collect such costs by an action against the person to whom such permit has been issued, and their superiors if a bond exists. In the event that land filling operations requiring a

permit are commenced prior to City review and approval, the City may require work stopped and all necessary applications filed and processed. In such cases, application fees shall be double the normal charge.

8. **Completion of Operation.**

a. All landfill and mining operations shall be completed within ninety (90) days of the issuance of the permit. Upon completion, the permit holder shall notify the City in writing of the date of completion. If additional time beyond the ninety (90) days is needed for completion, the permit holder may apply to the City and upon a satisfactory showing of need, the City may grant an extension of time. If such extension is granted, it shall be for a definite period and the City shall issue an extension permit. Extensions shall not be granted in cases where the permit holder fails to show that good faith efforts were made to complete the landfill operation within ninety (90) days and that failure to complete the operation was due to circumstances beyond the permit holder's control, such as shortage of fill material, teamsters, strike, unusually inclement weather, illness or other such valid and reasonable excuse for non-completion. In the event a request for an extension is denied, the permit holder shall be allowed a reasonable time to comply with the other provisions of this section relating to grading, leveling, and seeding or sodding. What constitutes such "reasonable time" shall be determined by the City Engineer after inspecting the premises.

b. At the completion of a landfill or mining operation, the premises shall be graded, leveled, and seeded or sodded with grass. The grade shall be such elevation with reference to any abutting street or public way as the City Engineer shall prescribe in the permit. The site shall also conform to such prerequisites as the City Engineer may determine with reference to storm water drainage runoff and storm water passage or flowage so that the landfill cannot become a source of, or an aggravation to, storm water drainage conditions in the area. The City Engineer shall inspect the project following completion to determine if the applicant has complied with the conditions required thereof. Failure of such compliance shall result in the withholding of any building permits for the site and notice of such withholding shall be filed in the office of the Washington County Recorder for the purposes of putting subsequent purchasers on notice.

401.15.J. Building Relocation.

1. **Review Process.** The relocation of any building or structure over one hundred twenty (120) square feet on a lot or onto another lot within the City shall be subject to review and approval through the conditional use permit process found in Section 401.03 of this Ordinance.

2. **Performance Standards.**

   a. Upon relocation, the building shall comply with the applicable requirements of the Uniform Building Code in effect in Oak Park Heights.

   b. The proposed relocated building shall comply with the character of the neighborhood in which it is being relocated as determined by the City Council.

   c. The relocated use will not result in a depreciation of neighborhood or adjacent property values.

   d. The relocated structure shall be similar to the market valuation of adjacent principal structures as determined by the City Assessor.

3. **Occupancy.** The relocated structure shall be ready for occupancy within eight (8) months from the date of location on the site.

4. **Performance Security.** A performance security shall be provided to the City as specified in Section 401.08 of this Ordinance.

401.15.K. Model Homes.

1. **Purpose.** The purpose of this Section is to provide for the erection of model homes in new subdivisions without adversely affecting the character of surrounding residential neighborhoods or creating a general nuisance. As model homes represent a unique temporary commercial use, special consideration must be given to the peculiar problems associated with them and special standards must be applied to ensure reasonable compatibility with their surrounding environment.

2. **Procedure.** The erection of a model home(s) shall require approval of the City Council.

3. **Special Requirements.**

   a. Temporary parking facilities equal to four (4) spaces per model home dwelling unit shall be provided. The overall design, drainage, and surfacing of the temporary parking facility shall be subject to the approval of the Zoning Administrator.

   b. Access from a temporary parking facility onto a local, residential street shall be discouraged. Where this requirement is physically impractical, access shall be directed away from residential neighborhoods to the greatest extent possible.

c. No model home shall incorporate outside lighting which creates a nuisance due to glare or intensity, as provided for in Section 401.15.B.7. of this Ordinance.

d. All model home signage shall comply with the sign regulations as contained in Section 401.15.G. of this Ordinance.

e. All criteria for conditional use consideration but not procedural requirements as contained in Section 401.03.A.8. of this Ordinance shall be considered and satisfactorily met.

401.15.L. Sexually Oriented Uses.

1. **Purpose.** The nature of sexually oriented uses is such that they are recognized as having adverse secondary characteristics, particularly when they are accessible to minors and located near residential property or related residential uses such as schools, day care centers, libraries or parks. Furthermore, the concentration of sexually oriented uses has an adverse effect upon the use and enjoyment of adjacent areas. The nature of sexually oriented uses requires that they not be allowed within certain zoning districts, or within minimum distances from each other or residential uses. Special regulation of sexually oriented uses is necessary to ensure that the adverse secondary effects would not contribute or enhance criminal activity in the area of such uses nor will it contribute to the blighting or downgrading of the surrounding property and lessening of its value.

2. **Sexually Oriented Use - General.** Sexually oriented uses as defined in this Ordinance shall be subject to the following general provisions:

a. Sexually oriented uses, either principal or accessory, shall be prohibited from locating in any building which is also utilized for residential purposes.

b. A sexually oriented use which does not qualify as an accessory use shall be classified as a sexually oriented use-principal.

c. A sexually oriented use either principal or accessory shall not sell or dispense non-intoxicating or intoxicating liquors nor shall it be located in a building or on a property which contains a business that sells or dispenses non-intoxicating or intoxicating liquors.

d. No sexually oriented use entertainment shall engage in any activity or conduct or permit any other person to engage in any activity or conduct in or about the sexually oriented use establishment which is prohibited by any ordinance of the City of Oak Park Heights, the State of Minnesota, or the United States of America. Nothing in this Ordinance shall be construed as authorizing or permitting conduct which is prohibited or regulated by other statutes ordinances, including but not limited to statutes or ordinances

prohibiting the exhibition, sale or distribution of obscene material generally, or the exhibition, sale or distribution of specified materials to minors.

e. No sexually oriented use either principal or accessory shall be conducted in any manner that permits the perception or observation from any property not approved as a sexually oriented use of any materials depicting, describing or related to “Specified Sexual Activities” or “Specified Anatomical Areas” by any visual or auditory media, including display, decoration, sign, show window, sound transmission or other means.

f. Sexually oriented use-principal and sexually oriented use-accessory establishments shall prominently display a sign at the entrance and located within two (2) feet of the door-opening device of the sexually oriented use establishment or section of the establishment devoted to adult books or materials which states: “This business sells or displays material containing adult themes. Persons under age eighteen (18) years of age shall not enter.” Said sign shall have letters at three-eighths (3/8) inches in height and no more than two (2) inches in height.

g. No person under the age of eighteen (18) shall be permitted on the premises of a sexually oriented use-principal establishment. No person under the age of eighteen (18) shall be permitted access to material displayed or offered for sale or rent by a sexually oriented use-principal or accessory establishment.

3. **Sexually Oriented Use - Principal.** Sexually oriented use-principal as defined in this Ordinance shall be subject to the following general provisions:

a. Sexually oriented use-principal shall be located at least three hundred (300) radial feet, as measured in a straight line from the closest part of the building or actual leased space of the sexually oriented use principal to the property line of R-1, R-1A, R-1B, R-1C, R-2, R-3 and R-B zoned property or property in the PUD which is projected to be residential.

b. Sexually oriented use-principal shall be located at least three hundred (300) radial feet, as measured in a straight line from the closest part of the building or actual leased space of the sexually oriented use-principal to the property line of:

1) A licensed day care center.
2) A public or private educational facility classified for preschool, early childhood family education, special education, pre-kindergarten, elementary, junior high or senior high.
3) A public library.
4) A public park.
5) Another existing sexually oriented use-principal.

c. The use shall be located within a building or actual leased space of a building within the area allowable for sexually oriented use-principal uses. Buildings or leased space intersected by a line representing the allowable area will be considered permissible only for that portion of the building or leased space that is within the allowable area.

d. Sexually oriented use-principal activities, as defined by this Ordinance, shall be classified as one use. No two sexually oriented uses-principal shall be located in the same building or upon the same property.

4. **Sexually Oriented Uses-Accessory**

a. Sexually oriented use-accessory shall:

1) Comprise no more than ten percent (10%) of the floor area of the establishment in which it is located.

2) Comprise no more than twenty percent (20%) of the gross receipts of the entire business operation.

3) Not involved or include any activity except the sale or rental of merchandise.

b. Sexually oriented use-accessory shall be restricted from and prohibit access to persons under the age of eighteen (18) by the physical separation of such items from areas of general public access:

1) Movie Rentals. Display areas shall be restricted from general view and shall be located within a separate room, the access of which is in clear view and under the control of the persons responsible for the operation or controlled in some other effective manner which meets with the approval of the Zoning Administrator.

2) Magazines. Publications classified or qualifying as sexually oriented uses shall not be accessible to persons under the age of eighteen (18) and shall be covered with a wrapper or other means to prevent display of any material other than the publication title.

3) Other Use. Sexually oriented use-accessory not specifically cited shall comply with the intent of this section subject to the approval of the Zoning Administrator.

c. Sexually oriented use-accessory activities shall be prohibited at any public show, movie, caravan, circus, carnival, theatrical or other performance or exhibition presented to the general public where minors are admitted.

401.15.M. Home Occupations.

1. **Purpose.** The purpose of this Section is to maintain the character and integrity of residential areas and to provide a means through the establishment of specific standards and procedures by which home occupations can be conducted in residential neighborhoods without jeopardizing the health, safety and general welfare of the surrounding neighborhood. In addition, this Section is intended to provide a mechanism enabling the distinction between permitted home occupations and special or customarily "more sensitive" home occupations, so that permitted home occupations may be allowed through an administrative process rather than a legislative hearing process.

2. **Procedures and Permits.**

2 a. **Permitted Home Occupation**. Any permitted home occupation as defined in this Ordinance, and subject to the performance standards of this Section, may be conducted solely within a single family detached dwelling (excluding attached garage space and/or any accessory structures). The permitted home occupation shall require a "permitted home occupation permit". Such permits shall be issued subject to the conditions of this Section, other applicable City Ordinances and State law. This permit may be issued by the Zoning Administrator based upon proof of compliance with the provisions of this Section. Application for the "permitted home occupation permit" shall be accompanied by a fee as adopted by the City Council. If the Zoning Administrator denies a permitted home occupation permit to an applicant, the applicant may appeal the decision to the City Council. The permit shall remain in force and effect until such time as there has been a change in conditions or until such time as the provisions of this Section have been breached. An annual fee, as set by the City Council, will be charged to the applicant. At such time as the City has reason to believe that either event has taken place, a public hearing shall be held before the Planning Commission, following the procedural provisions of a conditional use permit in Section 401.03 of this Ordinance. The City Council shall make a final decision on whether or not the permit holder is entitled to the permit.

b. **Special Home Occupation**. Any home occupation which does not meet the specific requirements for a permitted home occupation as defined in this Section shall require a "special home occupation permit" which shall be applied for reviewed and disposed on in accordance with the procedural provisions of a conditional use permit found in Section 401.03 of this Ordinance.

c. **Declaration of Conditions**. The City Council may impose such conditions on the granting of a special home occupation permit as may be necessary to carry out the purpose and provisions of this Section.

d. **Transferability**. Permits shall not run with the land and shall not be transferable.

e. **Lapse of Special Home Occupation Permit by Non-Use**. Whenever within one (1) year after granting a permit the use as permitted by the permit shall not have been initiated, then such permit shall become null and void unless a petition for extension of time in which to complete the work has been granted by the City Council. Such extension shall be requested in writing and filed with the Zoning Administrator at least thirty (30) days before the expiration of the original permit. There shall be no charge for the filing of such petition. The request for extension shall state facts showing a good faith attempt to initiate the use. Such petition shall be presented to the City Council for a decision.

[2] f. **Reconsideration.** Whenever an application for a permit has been considered and denied by the City Council, a similar application for a permit affecting substantially the same property shall not be considered again by the Planning Commission or City Council for at least six (6) months from the date of its denial unless a decision to reconsider such matters is made by not less than four-fifths (4/5) vote of the City Council.

3. **Requirement-General Provisions.** All home occupations shall comply with the following general provisions and according to definition, the applicable requirement provisions.

a. **General Provisions.**

1) No home occupation shall produce light, glare, noise, odor, vibration, smoke, dust, heat, or hazardous or toxic material shall not be produced, stored, or kept on the premises that will in any way have an objectionable effect upon adjacent or nearby property.

2) No equipment shall be used in the home occupation which will create electrical interference to surrounding properties.

3) Any home occupation shall be clearly incidental and secondary to the residential use of the premises, should not change the residential character thereof, and shall result in no incompatibility or disturbance to the surrounding residential uses.

4) No home occupation shall require internal or external alterations or involve construction features not customarily found in dwellings except where required to comply with local and state fire and police recommendations.

5) There shall be no exterior storage of equipment or materials used in the home occupation, except personal automobiles used in the home occupation may be parked on the site.

6) The home occupation shall meet all applicable fire and building codes.

12 7) All signing and informational or visual communication devices shall be in compliance with Section 401.15.G of this Ordinance.

8) All home occupations shall comply with the provisions of the City Code.

9) No home occupation shall be conducted between the hours of 10:00 pm. and 7:00 am. unless said occupation is contained entirely within the principal building, excluding attached garage space, and will not require any on-street parking facilities.

10) No commodity shall be sold on the premises.

11) Not over twenty-five (25) percent of any one story can be used for a home occupation.

b. Requirements-Permitted Home Occupations.

1) No person other than those who customarily reside on the premises shall be employed.

2) The general public shall not come to the premises in question for purposes pertaining to the conduct of the home occupation.

3) All permitted home occupations shall be conducted entirely within the principal dwelling, excluding attached garage space, and may not be conducted in an accessory building.

c. Requirements-Special Home Occupation.

1) No person other than a resident shall conduct the home occupation.

1, 32 2) Special home occupations shall be limited to only those activities of a non-residential nature which are specified as allowed by state statute or regulation such as day care group nursery or which comply with Sections a and b above (except for b.2), but are conducted entirely within the principal building, attached garage space, or detached accessory building.

3) Special home occupations may be allowed to accommodate their parking demand through utilization of on-street parking. In such cases where on-street parking facilities are necessary, however, the City Council shall maintain the right to establish the maximum number when and where changing conditions require additional review.

[32] 4). The general public shall be permitted to come to the premises in questions for purposes pertaining to the conduct of the home occupation.

[38]4. **Transient Lodging.** Transient Lodging shall be considered in all Residential Districts with the issuance of a Conditional Use Permit according to Section 401.03.A,7 and that the following criteria are satisfactorily met.

a. **General Provisions.** Only a detached single family home may be utilized for transient lodging consistent with the terms and conditions found herein:

1) The facility shall have a State issued license for lodging and/or food service, and /or comply with and maintain all health, safety, building and fire codes as may be required or applicable by the Building Official. The owner is responsible to ensure the facility is code compliant.

2) The owner may or may not occupy the structure while such facility is being utilized as a transient lodging facility. There shall be a limit of three (3) transient guests per bedroom and a limit of three (3) bedrooms for transient lodging in the facility.

3) All bedroom units shall be established within a principal structure or accessory structure.

4) No transient lodging facility shall be located closer than at least five hundred (500) feet from other bed and breakfast facilities and/or transient lodging as measured from property lines.

5) Dining and other facilities shall not be opened to the public but shall be used exclusively by the registered guests of the facility.

6) Two (2) off-street parking spaces shall be provided for the facility use plus one (1) for each bedroom over two (2) bedrooms. No parking spaces shall be located in the front yard of the property, other than on an existing driveway. All parking areas shall be improved with asphalt, concrete or materials suitable to control dust and drainage as approved by the City Engineer.

7) All signing and informational or visual communication devices shall be in compliance with Section 401.15.G if this Ordinance and/or as may be restricted by the City Council.

8) Adequate lighting shall be provided between the principal structure and the parking area for the safety of the guests.

9) Any excessive occupant noise reported to the City and in violation of City Code shall receive a warning on the first offense and a citation on the second. Continued citations shall be grounds for the suspension or revocation of use permits by the City Council.

10) All transient lodging conditional use permits may be reviewed, including site inspections, by the Building Official at any time. If violations of City Ordinance, Building Code, Fire Code or conditions of approval are found, the City Administrator shall schedule a public hearing of the City Council to review the conditional use permit and conditions. Upon review, the City Council may revise or cancel the conditional use permit.

11) Any applicable lodging or room tax as established by City Ordinance shall be paid by the owner of the property to the City.

[38]5. **Non-Conforming Use.** Existing home occupations and transient lodging lawfully existing on the date of this Ordinance may continue as non-conforming uses. They shall, however, be required to obtain permits for their continued operation. Any existing home occupation or transient lodging that is discontinued for a period of more than thirty (30) days, or is in violation of the Ordinance provisions, under which it was initially established, shall be brought into conformity with the provisions of this Section.

[38]6. **Inspection.** The City of Oak Park Heights hereby reserves the right upon issuing any home occupation or transient lodging permit to inspect the premises in which the occupation is being conducted to insure compliance with the provisions of this Section or any conditions additionally imposed.

401.15.N. Day Care Nursery Facilities.

[1] 1. **Purpose.** The regulation of day care nursery facilities in these zoning regulations is to establish standards and procedures by which day care facilities can be conducted within the City without jeopardizing the health, safety and general welfare of the day care participants and/or the surrounding neighborhood. This Section establishes the City's minimum requirements for the establishment of a day care facility which are not defined as permitted uses by State Statute or which are operated in uses other than single family homes. Day care facilities other than those defined permitted uses by State Statutes which operate in a single family dwelling as an

accessory use shall be subject to Section 401.15.M. of this Ordinance and processed as a home occupation.

2. **Application.** Day care nursery facilities which are not already permitted uses in the zoning district shall be considered conditional uses within all the zoning districts and shall be subject to the regulations and requirements of Section 401.03 of this Ordinance. In addition to the City regulation, all day care facility operations shall comply with the minimum requirements of the Minnesota Department of Welfare regulations, as may be amended.

3. **Declaration of Conditions.** The Planning Commission and City Council may impose such conditions on the granting of a day care facility conditional use permit as may be necessary to carry out the purpose and provisions of this Section.

4. **Site Plan Drawing Necessary.** All applications for a day care facility conditional use permit shall be accompanied by a site plan drawn to scale and dimensioned, displaying the information required by Section 401.03.C.3. of this Ordinance.

5. **General Provisions.**

   a. Day care facilities shall be allowed as a principal use or as an accessory use, provided that the day care facilities meet all the applicable provisions of this section.

   b. The proposed site for a day care facility as a principal use shall have a minimum lot area as determined by the Minnesota Department of Welfare. The City Council may increase the required lot area in those cases where such an increase is considered necessary to ensure compatibility of activities and maintain the public health, safety and general welfare. The day care facility shall meet the setback requirements of the respective zoning district.

   c. The site of the proposed day care facility as an accessory use shall meet all area and setback provisions of the respective zoning district in which the facility is to be located.

   d. Where the day care facility is in or abuts any commercial or industrial use or zoned property, the day care facility shall provide screening along the shared boundary of such uses. All of the required fencing and screening shall comply with the fencing and screening requirements of Section 401.15.E. of this Ordinance.

   e. Parking.

      1) There shall be adequate off-street parking which shall be located separately from any outdoor play area and shall be in compliance with Section 401.15.F. of this Ordinance. Parking areas shall be screened

from view of surrounding and abutting residential uses in compliance with Section 401.15.E. of this Ordinance.

2) When a day care facility is an accessory use within a structure containing another principal use, each use shall be calculated separately for determining the total off-street parking spaces required.

f. One off-street parking space in compliance with Section 401.15.F. of this Ordinance shall be provided.

g. All signing and informational or visual communication devices shall be in compliance with Section 401.15.G. of this Ordinance.

h. The structure and operation shall be in compliance with State of Minnesota Department of Human Services regulations and be licensed accordingly.

6. **Non-Conforming Use.** Existing day care facilities lawfully existing on the effective date of this Ordinance may continue as non-conforming uses. They shall, however, be required to obtain permits for their continued operation. Any existing day care facility that is discontinued for a period of more than one hundred eighty (180) days, or is in violation of the provisions of this Ordinance, under which it was initially established, shall be brought into conformity with the provisions of this Section.

7. **Inspection.** At any and all reasonable hours, with or without notice, the City hereby reserves the right upon issuing any day care facility conditional use permit to inspect the premises in which the occupation is being conducted to insure compliance with the provisions of this Section or any conditions additionally imposed.

401.15.O. Animals.

1. **Keeping Animals.**

a. Domestic animals are allowed in all zoning districts and further regulated in Section 601 of the City Code.

b. Non-domestic animals are regulated according to Section 1122 of the City Code.

401.15.P. Antennas.

1. **General Standards.** The following standards shall apply to all cellular telephone, public utility, microwave, radio and television broadcast transmitting, radio and television receiving, satellite dish and short-wave radio transmitting and receiving antenna.

a. All obsolete and unused antenna shall be removed within twelve (12) months of cessation of operation at the site, unless an exemption is granted by the Zoning Administrator.

b. All antenna shall be in compliance with all City building and electrical code requirements and as applicable shall require related permits.

c. Structural design, mounting and installation of the antenna shall be in compliance with manufacturer's specifications and as may be necessary, as determined by the Zoning Administrator, shall be verified and approved by a professional engineer.

d. When applicable, written authorization for antenna erection shall be provided by the property owner.

e. No advertising message shall be affixed to the antenna structure.

f. The height of the antenna shall be the minimum necessary to function satisfactorily, as verified by an electrical engineer or other appropriate professional.

g. Antennas shall not be artificially illuminated unless required by law or by a governmental agency to protect the public's health and safety.

h. When applicable, proposals to erect new antenna shall be accompanied by any required federal, state, or local agency licenses.

i. If a new antenna support structure is to be constructed, it shall be designed so as to accommodate other users including but not limited to other cellular communication companies, local police, fire and ambulance companies.

j. Antenna support structures under two hundred (200) feet in height shall be painted silver or have a galvanized finish to reduce visual impact.

k. Except as may be applicable in cases where a conditional use permit is required, antennas and support structures for federally licensed amateur radio stations and used in the amateur radio service are exempt from sub-paragraphs (c), (f), and (i) above, and must comply with sub-paragraph (l) below.

l. Amateur radio support structures (towers) must be installed in accordance with the instructions furnished by the manufacturer of that tower model. Because of the experimental nature of the amateur radio service, antennas mounted on such a tower may be modified or changed at any time so long as the published allowable load on the tower is not exceeded and the structure of the tower remains in accordance with the manufacture's specifications.

[40] m. Small wireless facilities, micro wireless facilities, and wireless support structures are regulated under this Section and Ordinance 704 of this code.

2. **Accessory and Secondary Use Antennas.** The following standards shall apply to all accessory and secondary use antennas including radio and television receiving antennas, satellite dishes, TVROs two (2) meters or less in diameter, short-wave radio dispatching antennas, or those necessary for the operation of electronic equipment including radio receivers, federally licensed amateur radio stations and television receivers.

   a. Accessory or secondary use antennas shall not be erected in any required yard (except a rear yard) or within public or private utility and drainage easements, and shall be set back a minimum of three (3) feet from all lot lines.

   b. Guy wires or guy wire anchors shall not be erected within public or private utility and drainage easements, and shall be set back a minimum of one (1) foot from all lot lines.

   c. Accessory or secondary use antennas and necessary support structures, monopoles or towers may extend a maximum of fifteen (15) feet above the normal height restriction for the affected zoning district, except support structures and antennas used in the amateur radio service may extend a maximum of two (2) times the normal height restriction for the affected zoning district.

   d. The installation of more than one (1) support structure per property shall require the approval of a conditional use permit.

3. **Cellular Telephone Antennas.**

   a. Residential District Standards.

      1) Antennas located upon public structures: Cellular telephone antenna located upon public structures shall require the approval of the City Council and shall comply with the following standards:

         a) The applicant shall demonstrate by providing a coverage/ interference analysis and capacity analysis prepared by a professional engineer that location of the antennas as proposed is necessary to meet the frequency reuse and spacing needs of the cellular system and to provide adequate portable cellular telephone coverage and capacity to areas which cannot be adequately served by locating the antennas in a less restrictive district.

b) Transmitting, receiving and switching equipment shall be housed within an existing structure whenever possible. If a new equipment building is necessary for transmitting, receiving and switching equipment, it shall be situated in the rear yard of the principal use and shall be screened from view by landscaping where appropriate.

c) All lease, administrative and consultant fees for antennas located upon a public structure shall be set by the City Council and paid by the applicant before activation of the antenna.

2) Antennas not located upon a public structure: Cellular telephone antenna not located upon a public structure shall require the processing of a conditional use permit and shall comply with the following standards:

a) The applicant shall demonstrate by providing a coverage/ interference analysis and capacity analysis prepared by a professional engineer that location of the antennas as proposed is necessary to meet the frequency reuse and spacing needs of the cellular system and to provide adequate portable cellular telephone coverage and capacity to areas which cannot be adequately served by locating the antennas in a less restrictive district.

b) The antennas shall be located on an existing structure, if possible, and shall not extend more than fifteen (15) feet above the structural height of the structure to which they are attached.

c) If no existing structure which meets the height requirements for the antennas is available for mounting purposes, the antennas may be mounted on a single ground mounted pole provided that:

i. The pole not exceed seventy-five (75) feet in height.

ii. The setback of the pole from the nearest residential structure is not less than the height of the antenna. Exceptions to such setback may be granted if a qualified structural engineer specifies in writing that any collapse of the pole will occur within a lesser distance under all foreseeable circumstances.

d) Transmitting, receiving and switching equipment shall be housed within an existing structure whenever possible. If a new equipment building is necessary for transmitting, receiving

and switching equipment, it shall be situated in the rear yard of the principal use and shall be screened from view by landscaping where appropriate.

e) Unless the antenna is mounted on an existing structure, at the discretion of the City, a security fence not greater than eight (8) feet in height with a maximum opacity of fifty (50) percent shall be provided around the support structure.

40 3) Small wireless facilities, micro wireless facilities and wireless support structures: Small wires facilities, micro wireless facilities and wireless support structures located in residential districts shall be regulated under Ordinance 704 of this code and require a public hearing, recommendation of the Planning Commission, and review by the City Council as follows:

a) The Planning Commission shall conduct a public hearing once an application has been deemed complete and reports its findings and recommendations to the City Council. Written notice of such hearing shall be mailed not less than ten (10) days prior to the public hearing, to all owners of property, according to the Washington County assessment records, within five hundred (500) feet of the locations included in the request.

b) The City Council and Planning Commission shall consider possible adverse effects of the proposed application. Their judgment shall be based upon the following factors:

i. Generally applicable and reasonable health, safety and welfare regulations consistent with Ordinance 704 of this code.

ii. The provisions of Ordinance 704 of this code are considered and satisfactorily met.

b. Business District Standards:

1) Antennas Located Upon A Public Structure. Cellular telephone antenna located upon a public structure shall require the approval of the City Council and shall comply with the following standards.

a) Transmitting, receiving and switching equipment shall be housed within an existing structure whenever possible. If a new equipment building is necessary for transmitting, receiving and switching equipment, it shall be situated in the rear yard of

the principal use and shall be screened from view by landscaping where appropriate.

b) All lease, administrative and consultant fees for antennas located upon a public structure shall be set by the City Council and paid by the applicant before activation of the antenna.

2) Antennas Not Located Upon A Public Structure. Cellular telephone antennas not located upon a public structure shall require the processing of a conditional use permit and shall comply with the following standards:

a) The applicant shall demonstrate by providing a coverage/ interference analysis and capacity analysis prepared by a professional engineer that location of the antennas as proposed is necessary to meet the frequency reuse and spacing needs of the cellular system and to provide adequate portable cellular telephone coverage and capacity to areas which cannot be adequately served by locating the antennas in a less restrictive district.

b) The antennas shall be located on an existing structure, if possible, and shall not extend more than fifteen (15) feet above the structural height of the structure to which they are attached.

c) If no existing structure which meets the height requirements for the antennas is available for mounting purposes, the antennas may be mounted on a single ground mounted pole provided that:

i. The pole not exceed seventy-five (75) feet in height.

ii. The setback of the pole from the nearest residential structure is not less than the height of the antenna. Exceptions to such setback may be granted if a qualified structural engineer specifies in writing that any collapse of the pole will occur within a lesser distance under all foreseeable circumstances.

d) Transmitting, receiving and switching equipment shall be housed within an existing structure whenever possible. If a new equipment building is necessary for transmitting, receiving and switching equipment, it shall be situated in the rear yard of the principal use and shall be screened from view by landscaping where appropriate.

e) Unless the antenna is mounted on an existing structure, at the discretion of the City, a security fence not greater than eight (8) feet in height with a maximum opacity of fifty (50) percent shall be provided around the support structure.

40 3) Small wireless facilities, micro wireless facilities, and wireless support structures: Small wireless facilities, micro wireless facilities, and wireless support structures located in business districts are a permitted use and regulated under Ordinance 704 of this code.

c. Industrial District Standards.

1) Antennas Located Upon A Public Structure. Cellular telephone antennas located upon a public structure shall require the approval of the City Council and shall comply with the following standards:

a) All lease, administrative and consultant fees for antennas located upon a public structure shall be set by the City Council and paid by the applicant before activation of the antenna.

2) Antennas Not Located Upon A Public Structure. Cellular telephone antennas not located upon a public structure shall require the processing of an administrative permit and shall comply with the following standards:

a) The antennas shall be located upon a structure if possible.

b) If no existing structure which meets the height requirements for mounting the antennas, the antennas may be mounted upon a supporting pole or tower not exceeding one hundred fifty (150) feet in height. Such pole or tower shall be located on a parcel having a dimension equal to the height of the pole or tower measured between the base of the pole or tower located nearest the property line and said property line, unless a qualified structural engineer specifies in writing that the collapse of the pole or tower will occur within a lesser distance under all foreseeable circumstances.

40 3) Small wireless facilities, micro wireless facilities, and wireless support structures: Small wireless facilities, micro wireless facilities, and wireless support structures located in industrial districts are a permitted use and regulated under Ordinance 704 of this code.

4. **Satellite Dishes.**

a. Residential District Standards. Single satellite dish TVROs greater than one (1) meter in diameter may be allowed as a conditional use within the residential zoning districts of the City and shall comply with the following standards:

1) The lot on which the satellite dish antenna is located shall be of sufficient size to assure that an obstruction-free receive window can be maintained within the limits of the property ownership.

2) Except where the antenna is screened by a structure exceeding the antenna height, landscape buffering and screening shall be maintained on all sides of the satellite dish antenna in a manner in which growth of the landscape elements will not interfere with the receive window.

3) The satellite dish antenna is not greater than three (3) meters in diameter.

b. Business District Standards. Satellite dish antennas within the business zoning districts of the City shall be limited to those listed as permitted accessory and conditional uses in the applicable zoning district subject to the provisions of this Ordinance.

c. Industrial District Standards. Commercial, private and public satellite dish transmitting or receiving antennas in excess of two (2) meters may be allowed as a conditional use within the I, Industrial District of the City and shall comply with the following standards:

1) The lot on which the satellite dish antenna is located shall be of sufficient size to assure that an obstruction free transmit-receive window or windows can be maintained within the limits of the property ownership.

2) Except where the antenna is screened by a structure exceeding the antenna height, landscape buffering and screening shall be maintained on all sides of the satellite dish antenna in a manner in which growth of the landscape elements will not interfere with the transmit-receive window.

5. **Commercial and Public Radio and Television Transmitting Antennas, and Public Utility Microwave Antennas.** Commercial and public radio and television transmitting and public utility microwave antennas shall comply with the following standards:

   a. Such antenna shall be considered an allowed conditional use within the I, Industrial District of the City and shall be subject to the regulations and requirements of this Code.

   b. The antennas, transmitting towers, or array of towers shall be located on a continuous parcel having a dimension equal to the height of the antenna, transmitting tower, or array of towers measured between the base of the antenna or tower located nearest a property line and said property line, unless a qualified structural engineer specifies in writing that the collapse of any antenna or tower will occur within a lesser distance under all foreseeable circumstances.

   c. Unless the antenna is mounted on an existing structure, at the discretion of the City, a fence not greater than eight (8) feet in height with a maximum opacity of fifty (50) percent shall be provided around the support structure and other equipment.

401.15.Q. Essential Services.

1. **Purpose.** The purpose of this Section is to provide for the installation of essential services such as telephone lines, pipelines, electric transmission lines and sub-stations in such a manner that the health, safety and welfare of the City will not be adversely affected. Essential services should also be installed in cognizance of existing and projected demands for such services.

2. **Special Permit Required.** All underground telephone lines, pipelines for local distribution, underground electric transmission lines, and overhead utility lines and electric transmission lines and sub-stations less than 33 KV, when installed in any public right-of-way in any zoning district, shall require a special permit approved by the City Engineer.

3. **City Approval Required.** All underground telephone lines, pipelines for local distribution, underground transmission lines, and overhead utility lines and electric transmission lines less than 33 KV, which are extended to serve more than one parcel and are proposed to be installed at locations other than in public right-of-way shall require a special permit issued by the City after approval by the City Engineer. Approval by the City Engineer shall be based upon the information furnished in the following procedural requirements:

a. Prior to the installation of any of the previous essential services, the owner of such service shall file with the Zoning Administrator, all maps and other pertinent information as deemed necessary for the City Engineer to review the proposed project.

b. The Zoning Administrator shall transmit the map and accompanying information to the City Engineer for review and approval regarding the project's relationship to the Comprehensive Plan and parts thereof and/or City Code provisions.

c. The City Engineer shall report in writing to the Zoning Administrator the findings as to the compliance of the proposed project with the Comprehensive Plan and City Code provisions.

d. In considering applications for the placement of essential services, as regulated in this Section, the aforesaid City staff shall consider the effect of the proposed project upon the health, safety and general welfare of the City, as existing and as anticipated; and the effect of the proposed project upon the Comprehensive Plan.

e. Upon receiving the approval of the City Engineer, the Zoning Administrator shall issue a permit for the installation and operation of the applicant's essential services. If the Engineer's report recommends the denial of said permit causing the Zoning Administrator to deny its issuance, the applicant may appeal said decision to the Board of Appeals and Adjustments under the rules and procedures as set forth in Section 401.04 of this Ordinance.

4. **Conditional Use Permit Required.** All transmission pipelines (i.e., pipelines not required for local distributing network), and overhead transmission and sub-station lines in excess of 33 KV shall be a conditional use in all districts subject to the following procedural requirements:

a. Prior to the installation of any of the previous essential services, the owner of such service shall file with the Zoning Administrator, all maps and other pertinent information as deemed necessary for the City Council to review the proposed project.

b. The Zoning Administrator shall transmit the map and accompanying information to the City Council for its review regarding the project's relationship to the Comprehensive Plan and parts thereof.

c. The City Council shall hold the necessary public hearings as prescribed by this Section for conditional uses.

d. In considering the applications for the placement of essential services, as regulated by this Section, the City Council shall consider the advice and recommendations of City staff and the effect of the proposed project upon

the health, safety, and general welfare of the City, existing and anticipated and the effect of the proposed project upon the Comprehensive Plan.

401.15.R. Public Property/Rights-Of-Way.

1. **Coverage.** There shall be no erection and/or placement of any structure in the public right-of-way or on City property by any person, or group other than the City of Oak Park Heights, Washington County, Metropolitan Public Agency or the State of Minnesota, unless granted by a variance in accordance with Section 401.04 of this Ordinance.

2. **Liability.** As a condition of approval for the erection or placement of a structure in the public right-of-way, or on City property by any party other than a governmental unit, the applicant shall be required to sign a contract with the City that holds harmless the City of Oak Park Heights for any potential liability and shall demonstrate to the City proof of adequate liability insurance.

401.15.S. Subdivision of Two Family Lots.

1. **General Requirements.** The subdivision of base lots containing two family dwellings or quadraminiums, to permit individual private ownership of a single dwelling within such a structure is acceptable upon the approval of the City Council. Approval of a subdivision request is contingent upon the following requirements:

   a. Prior to a two family or quadraminium subdivision, the base lots must meet all the requirements of the zoning district.

   b. The following are minimum unit requirements for two family dwellings and quadraminium subdivisions where City sewer and water are available.

LOT AREA PER DWELLING UNIT (Square Feet)

Two Family	Quadraminiums	R-2	R-3
6,000*	4,000*	80'	100'

Front Yard		Side Yard **		Rear Yard	
30'[1)]	30'	10'[2)]	20'	30'	30'

* Additional 500 square feet for each bedroom over two bedrooms per unit.

** Side yard setbacks are not applicable where structure has a shared wall(s) as in the case of two family dwellings and quadraminiums.

[1)] Where adjacent structures within the same block have front yard setbacks from those required, the front yard minimum setback shall be the average of the adjacent structures. If there is only one adjacent structure, the setback shall be the average of the required setback and the setback of the adjacent structure.

[2)] Not less than twenty (20) feet from the lot line.

   c. There shall be no more than one (1) principal structure on a base lot in all residential districts. The principal structure on unit lot created in a two family or quadraminium subdivision will be the portion of the attached dwelling existing or constructed on the platted unit lots.

   d. Permitted accessory uses as defined by the zoning districts are acceptable provided they meet all the zoning requirements.

e. A property maintenance agreement must be arranged by the applicant and submitted to the City Attorney for his review and subject to approval. The agreement shall ensure the maintenance and upkeep of the structure and the lots to meet minimum City standards. The agreement is to be filed with the Washington County Recorder's Office as a deed restriction against the title of each unit lot.

f. Separate public utility service shall be provided to each subdivided unit and shall be subject to the review and approval of the City Engineer.

2. **Usable Open Space.** Each multiple family dwelling site shall contain at least five hundred (500) square feet of usable open space as defined by Section 401.02.B of this Ordinance for each dwelling unit contained thereon.

[9, 24] 401.16. DESIGN GUIDELINES

[16] **401.16.A.** The City of Oak Park Heights does herewith include and adopt design guidelines to coordinate themes for site design, architecture, parking lot design, pedestrian/bike access, environment, utilities and signage for all commercial and industrial properties in the City. The design guidelines shall be enforced for all new construction and/or re-construction and remodeling where a building permit is required and all areas designated for commercial and industrial use in the City of Oak Park Heights Comprehensive Plan including all of the businesses and industrial zoning districts and all the commercial and industrial areas zoned PUD, Planned Unit Development or other commercially zoned areas of the City of Oak Park Heights, as are displayed in the Oak Park Heights Zoning Ordinance and map.

401.16.B. The specific design guidelines shall be set forth within a manual available for distribution at the office of the City Administrator for the City of Oak Park Heights, which manual and provisions therefore may be amended by resolution of the City Council from time to time.

401.16.C. In the application of this Ordinance, should the provisions as contained within the design guidelines be in conflict with other provisions set forth within the text of the zoning code, the design guidelines shall apply.

[26] 401.17. ALTERNATIVE ENERGY SYSTEMS ORDINANCE

401.17.A. Scope. This section of the Zoning Ordinance applies to all alternative energy systems in all zoning districts.

401.17.B. Purpose and Intent. It is the goal of the City, as expressed in the Comprehensive Plan, to the commitment of preservation of the environment and to the principle that each generation of residents must meet the needs of the present without compromising the ability of future residents to meet their own needs. In accordance with that goal, the City finds that it is in the public interest to encourage alternative energy systems that have a positive impact on energy production and conservation while not having an adverse impact on the community. Therefore, the purposes of this Ordinance include:

1. To promote rather than restrict development of alternative energy sources by removing regulatory barriers and creating a clear regulatory path for approving alternative energy systems.

2. To create a livable community where development incorporates sustainable design elements such as resource and energy conservation and use of renewable energy.

3. To protect and enhance air quality, limit the effects of climate change and decrease use of fossil fuels.

4. To encourage alternative energy development in locations where the technology is viable and environmental, economic and social impacts can be mitigated.

401.17.C. Definitions.

Alternative Energy Systems Related/General Definitions:

1. Accessory: For the purposes of this section, means a system designed as a secondary use to existing buildings or facilities, wherein the power generated is used primarily for on-site consumption.

2. Alternative energy system: A ground source heat pump, wind or solar energy system.

Alternative Energy Systems Related/Solar:

3. Building-integrated solar energy system: A solar energy system that is an integral part of a principal or accessory building, rather than a separate mechanical device, replacing or substituting for an architectural or structural component of the building including, but not limited to, photovoltaic or hot water solar systems contained within roofing materials, windows, skylights and awnings.

4. Flush-mounted solar energy system: A roof-mounted system mounted directly abutting the roof. The pitch of the solar collector may exceed the pitch of the roof up to five (5) percent but shall not be higher than ten (10) inches above the roof.

5. Passive solar energy system: A system that captures solar light or heat without transforming it to another form of energy or transferring the energy via a heat exchanger.

6. Photovoltaic system: A solar energy system that converts solar energy directly into electricity.

7. Solar energy system: A device or structural design feature, a substantial purpose of which is to provide daylight for interior lighting or provide for the collection, storage and distribution of solar energy for space heating or cooling, electricity generation or water heating.

Alternative Energy Systems Related/Wind Energy:

8. Horizontal axis wind turbine: A wind turbine design in which the rotor shaft is parallel to the ground and the blades are perpendicular to the ground.

9. Hub: The center of a wind generator rotor, which holds the blades in place and attaches to the shaft.

10. Hub height: The distance measured from natural grade to the center of the turbine hub.

11. Monopole tower: A tower constructed of tapered tubes that fit together symmetrically and are stacked one section on top of another and bolted to a concrete foundation without support cables.

12. Residential wind turbine: A wind turbine of ten (10) kilowatt (kW) nameplate generating capacity or less.

13. Small wind turbine: A wind turbine of one hundred (100) kilowatt (kW) nameplate generating capacity or less.

14. Total height: The highest point above natural grade reached by a rotor tip or any other part of a wind turbine.

15. Tower: A vertical structure that supports a wind turbine.

16. Utility wind turbine: A wind turbine of more than one hundred (100) kilowatt (kW) nameplate generating capacity.

17. Vertical axis wind turbine: A type of wind turbine where the main rotor shaft runs vertically.

18. Wind energy system: An electrical generating facility that consists of a wind turbine, feeder line(s), and associated controls and may include a tower.

19. Wind turbine: Any piece of electrical generating equipment that converts the kinetic energy of blowing wind into electrical energy through the use of airfoils or similar devices to capture the wind.

Alternative Energy Systems Related/Ground Source Heat Pumps (Geothermal Heating):

20. Closed loop ground source heat pump system: A system that circulates a heat transfer fluid, typically food-grade antifreeze, through pipes or coils buried beneath the land surface or anchored to the bottom in a body of water.

21. Ground source heat pump system: A system that uses the relatively constant temperature of the earth or a body of water to provide heating in the winter and cooling in the summer. System components include open or closed loops of pipe, coils or plates; a fluid that absorbs and transfers heat; and a heat pump unit that processes heat for use or disperses heat for cooling; and an air distribution system.

22. Heat transfer fluid: A non-toxic and food grade fluid such as potable water, aqueous solutions of propylene glycol not to exceed twenty (20) percent by weight or aqueous solutions of potassium acetate not to exceed twenty (20) percent by weight.

23. Horizontal ground source heat pump system: A closed loop ground source heat pump system where the loops or coils are installed horizontally in a trench or series of trenches no more than twenty (20) feet below the land surface.

24. Open loop ground source heat pump system: A system that uses groundwater as a heat transfer fluid by drawing groundwater from a well to a heat pump and then discharging the water over land, directly in a water body or into an injection well.

25. Vertical ground source heat pump system: A closed loop ground source heat pump system where the loops or coils are installed vertically in one or more borings below the land surface.

401.17.D. Application. Applications for an alternative energy system shall be accompanied by drawings that include the following. An application for a Conditional Use Permit under this section shall also include all information outlined in Section 401.03.C. of this Ordinance.

1. Location of the proposed alternative energy system and any auxiliary equipment.

2. A survey of the lot with detailed setback dimensions to property lines.

3. A photograph or detailed drawings of the alternative energy system equipment that is visible above ground.

4. Specifications for the alternative energy system including type, size, rated power output, materials, safety and noise characteristics as applicable.

5. Location, dimensions and types of existing structures and uses on the lot.

6. Location of above and below ground utility lines within or adjacent to the lot.

7. Location and size of structures, trees and other objects on the lot that may impact the alternative energy system.

401.17.E. Solar Energy Systems.

1. Zoning District Allowances. Solar energy systems in accordance with the standards of this section are allowed as a permitted accessory use in all zoning districts.

2. Standards.

   a. Exemption. Passive or building-integrated solar energy systems are exempt from the requirements of this section and shall be regulated as any other building element.

   b. Minimum Lot Size. In all zoning districts, a minimum lot size of eight thousand (8,000) square feet is required for ground-mounted solar energy systems.

c. Height. Roof-mounted solar energy systems shall comply with the maximum height requirements of the applicable zoning district. Ground-mounted solar energy systems shall not exceed fifteen (15) feet in height.

d. Location. In residential zoning districts, ground-mounted solar energy systems are limited to the rear yard. In non-residential zoning districts, ground-mounted solar energy systems may be permitted in the front yard of any lot or the side yards on corner lots.

e. Setbacks. In all zoning districts, ground-mounted solar energy systems including any appurtenant equipment shall be set back a minimum of fifteen (15) feet from all property lines and a minimum of thirty (30) feet from all dwellings or buildings located on adjacent lots. Roof-mounted systems shall comply with all building setbacks in the applicable zoning district and shall not extend beyond the exterior perimeter of the building on which the system is mounted.

f. Roof mounting. Roof-mounted solar collectors shall be flush mounted on pitched roofs. Solar collectors may be bracket mounted on flat roofs.

g. Easements. Solar energy systems shall not encroach on public drainage, utility roadway or trail easements.

h. Screening. Solar energy systems shall be screened from view to the extent possible without reducing their efficiency. Screening may include walls, fences or landscaping.

i. Maximum Area. In residential zoning districts, ground-mounted solar energy systems shall be limited to a maximum lot area consistent with the accessory structure limitations in Section 401.15.D.4. of this Ordinance which specifies no more than twenty five (25) percent of the rear yard for all structures.

j. Aesthetics. All solar energy systems shall use colors that blend with the color of the roof or other structure. Reflection angles from collector surfaces shall be oriented away from neighboring windows. Where necessary, screening may be required to address glare.

k. Feeder lines. The electrical collection system shall be placed underground within the interior of each parcel. The collection system may be placed overhead near substations or points of interconnection to the electric grid.

l. Deviations. Any deviation from the required standards of this Ordinance may be permitted through a conditional use permit in accordance with Section 401.17.D, and Section 401.03 of this Ordinance.

3. Safety.

a. Standards and Certification.

1) Standards. Solar energy systems shall meet the minimum standards outlined by the International Electrotechnical Commission (IEC) ,the American Society of Heating, Refrigerating, and Air-conditioning Engineers (ASHRAE), ASTM International, British Standards Institution (BSI), International Electrotechnical Commission (IEC), International Organization for Standardization (ISO), Underwriter's Laboratory (UL), the Solar Rating and Certification Corporation (SRCC) or other standards as determined by the City Administrator.

2) Certification. Solar energy systems shall be certified by Underwriters Laboratories, Inc. and the National Renewable Energy Laboratory, the Solar Rating and Certification Corporation or other body as determined by the City Administrator. The City reserves the right to deny a building permit for proposed solar energy systems deemed to have inadequate certification.

b. Utility Connection. All grid connected systems shall have an agreement with the local utility prior to the issuance of a building permit. A visible external disconnect must be provided if required by the utility.

4. Abandonment. If the solar energy system remains nonfunctional or inoperative for a continuous period of one (1) year, the system shall be deemed to be abandoned and shall constitute a public nuisance. The owner shall remove the abandoned system at their expense after a demolition permit has been obtained. Removal includes the entire structure including transmission equipment.

5. Permits. A building permit and conditional use permit, if required, shall be obtained for any solar energy system prior to installation.

401.17.F. Wind Energy Systems.

1. Zoning District Allowances. Wind turbines in accordance with the standards of this section are permitted accessory uses on lots at least three (3) acres in the O, Open Space Conservation District and the I, Industrial District, and on lots at least 1.5 acres in size in the B-3 Highway Business and Warehouse District, the B-W, Business/Warehouse District, and the P-I, Public Institutional District provided the wind turbine is located at least three hundred feet from a residential zoning district. Wind energy systems are not permitted in any other zoning districts including all districts zoned PUD, Planned Unit Development.

2. Standards.

a. Number. No more than one (1) wind energy system is permitted per parcel.

b. Height. In the O, Open Space Conservation District and the I, Industrial District, a maximum hub height of sixty (60) feet is allowed as a permitted accessory use; additional height up to one hundred twenty (120) feet in total height may be permitted as a conditional use in accordance with Section 401.17.D and Section 401.03 of this Ordinance. In the B-3, Highway Business and Warehouse District, and the B-W, Business/Warehouse District, a maximum hub height of forty five (45) is allowed as a permitted accessory use. Additional height, up to seventy-five 75) feet in total height, may be permitted as a conditional use in accordance with Section 401.17.D and Section 401.03 of this Ordinance.

c. Blade length. A maximum blade length of fifteen (15) feet is permitted.

d. Roof mounting. Roof mounted wind turbines are not permitted.

e. Setbacks. The base of the wind turbine tower shall be set back from all property lines a distance equal to the hub height. Wind energy systems shall not be installed in the front yard of any lot or in the side yard of a corner lot adjacent to a public right-of way. All wind energy systems shall be located at least three hundred (300) feet from any residential zoning district.

f. Easements. Wind energy systems shall not encroach on public drainage, utility roadway or trail easements.

g. Noise. Wind energy systems shall comply with Minnesota Pollution Control Agency standards outlined in Minnesota Rules Chapter 7030 at all property lines.

h. Screening. Wind energy systems are exempt from the requirements of Section 401.15.E of this Ordinance.

i. Aesthetics. All portions of the wind energy system shall be a non-reflective, non-obtrusive color, subject to the approval of the City Administrator. Only monopole towers are permitted. The appearance of the turbine, tower and any other related components shall be maintained throughout the life of the wind energy system pursuant to industry standards. Systems shall not be used for displaying any advertising. Systems shall not be illuminated.

j. Feeder lines. The electrical collection system shall be placed underground within the interior of each parcel. The collection system may be placed overhead near substations or points of interconnection to the electric grid.

k. Deviations. Any deviation from the required standards of this Ordinance may be permitted through a conditional use permit in accordance with Section 401.17.D and 401.03 of this Ordinance.

3. Safety.

a. Standards and Certification.

1) Standards. Wind energy systems shall meet minimum standards such as International Electrotechnical Commission (IEC) 61400-2 or the American Wind Energy Association's (AWEA) Small Wind Turbine Performance and Safety Standard or other standards as determined by the City Administrator.

2) Certification. Wind energy systems shall be certified by Underwriters Laboratories, Inc. and the National Renewable Energy Laboratory, the Small Wind Certification Council or other body as determined by the City Administrator. The City reserves the right to deny a building permit for proposed wind energy systems deemed to have inadequate certification or testing for operation in a severe winter climate.

3) Maintenance. Wind energy systems shall be maintained under an agreement or contract by the manufacturer or other qualified entity.

b. Utility Connection. All grid connected systems shall have an agreement with the local utility prior to the issuance of a building permit. A visible external disconnect must be provided if required by the utility.

4. Abandonment. If the wind energy system remains nonfunctional or inoperative for a continuous period of one (1) year, the system shall be deemed to be abandoned and shall constitute a public nuisance. The owner shall remove the abandoned system at their expense after a demolition permit has been obtained. Removal includes the entire structure including foundations to below natural grade and transmission equipment.

5. Permits. A building permit and conditional use permit, if required, shall be obtained for any wind energy system prior to installation.

401.17.G. Ground Source Heat Pumps (Geothermal Heating).

1. Zoning District Allowances. Ground source heat pump systems in accordance with the standards of this section are allowed as a permitted accessory use in all zoning districts.

2. Standards.

a. System Requirements.

1) Only closed loop ground source heat pump systems utilizing heat transfer fluids as defined in Section 401.17.C.4 of this Ordinance are permitted. Open loop ground source heat pump systems are not permitted.

2) Ground source heat pump systems in public waters may be permitted as a conditional use in accordance with Section 401.17.D and Section 401.03 of this Ordinance, subject to approval from the Minnesota Department of Natural Resources and subject to written consent of all property owners and/or approval by an association in accordance with its adopted bylaws.

3) Ground source heat pump systems in water bodies owned or managed by the City of Oak Park Heights are not permitted.

b. Setbacks.

1) All components of ground source heat pump systems including pumps, borings and loops shall be set back at least five (5) feet from interior side lot lines and at least ten (10) feet from rear lot lines.

2) Above-ground equipment associated with ground source heat pumps shall not be installed in the front yard of any lot or the side yard of a corner lot adjacent to a public right-of-way and shall meet all required setbacks for the applicable zoning district.

c. Easements. Ground source heat pump systems shall not encroach on public drainage, utility roadway or trail easements.

d. Noise. Ground source heat pump systems shall comply with Minnesota Pollution Control Agency standards outlined in Minnesota Rules Chapter 7030.

e. Screening. Ground source heat pumps are considered mechanical equipment and subject to the requirements of Section 401.15.E.10.c.

f. Deviations. Any deviation from the required standards of this ordinance may be permitted through a conditional use permit in accordance with Section 401.17.D and Section 401.03 of this Ordinance.

3. Safety. Ground source heat pumps shall be certified by Underwriters Laboratories, Inc. and meet the requirements of the State Building Code.

4. Abandonment. If the ground source heat pump system remains nonfunctional or inoperative for a continuous period of one (1) year, the system shall be deemed to be abandoned and shall constitute a public nuisance. The owner shall remove the abandoned system at their expense after a demolition permit has been obtained in accordance with the following:

   a. The heat pump and any external mechanical equipment shall be removed.

   b. Pipes or coils below the land surface shall be filled with grout to displace the heat transfer fluid. The heat transfer fluid shall be captured and disposed of in accordance with applicable regulations. The top of the pipe, coil or boring shall be uncovered and grouted.

   c. Lake ground source heat pump systems shall be completely removed from the bottom of the body of water.

5. Permits. A building permit and a conditional use permit, if required, shall be obtained for any ground source heat pump system prior to installation. Borings for vertical systems are subject to approval from the Minnesota Department of Public Health.

401.17.H. Conditional Use Permits. Application for a conditional use permit under this sub-section shall be regulated by Section 401.03 of this Ordinance. Such a conditional use permit may be granted provided that:

1. That the deviation is required to allow for the improved operation of the alternative energy system;

2. That the alternative energy system has a net energy gain;

3. That the alternative energy system does not adversely affect solar access to adjacent properties;

4. That the alternative energy system complies with all other engineering, building, safety and fire regulations;

5. That the alternative energy system is found to not have any adverse impacts on the area, including the health, safety and general welfare of occupants of neighboring properties and users of public rights-of-way; and

6. The provisions of Section 401.03.A.8 of this Ordinance shall be considered and a determination made that the proposed activity is in compliance with such criteria.

401.17.I. Zoning District Allowance Summary Table. Solar energy systems, wind energy systems and ground source heat pumps are allowed as follows in each of the zoning districts as follows:

Zoning District	Solar Energy System	Wind Energy System	Ground Source Heat Pumps
O Open Space	Permitted Accessory	Permitted Accessory 3 Acres Minimum	Permitted Accessory
R-1 Single Family	Permitted Accessory	Not Permitted	Permitted Accessory
R-1A Single Family	Permitted Accessory	Not Permitted	Permitted Accessory
R-1B Single Family	Permitted Accessory	Not Permitted	Permitted Accessory
R-1C Single Family	Permitted Accessory	Not Permitted	Permitted Accessory
R-2 Low and Medium Density	Permitted Accessory	Not Permitted	Permitted Accessory
R-3 Multiple Family	Permitted Accessory	Not Permitted	Permitted Accessory
R-B Residential Business	Permitted Accessory	Not Permitted	Permitted Accessory
B-1 Neighborhood Business	Permitted Accessory	Not Permitted	Permitted Accessory
B-2 General Business	Permitted Accessory	Not Permitted	Permitted Accessory
B-3 Highway Business	Permitted Accessory	Permitted Accessory 1.5 Acres Minimum	Permitted Accessory
B-4 Limited Business	Permitted Accessory	Not Permitted	Permitted Accessory
B-W Business Warehousing	Permitted Accessory	Permitted Accessory 1.5 Acres Minumum	Permitted Accessory
I Industrial District	Permitted Accessory	Permitted Accessory 3 Acres Minimum	Permitted Accessory
P-I Public/Institutional	Permitted Accessory	Permitted Accessory 1.5 Acres Minimum	Permitted Accessory

401.18 - 401.19 RESERVED

401.20. GENERAL DISTRICT PROVISIONS

401.20.A. Establishment of Districts. The following zoning classifications are hereby established within the City of Oak Park Heights.

1. **Residential Districts.**

   a. O Open Space Conservation District
   b. R-1 Single Family Residential District
   c. R-1A Single Family Residential District
   d. R-1B Single Family Residential District
   e. R-1C Single Family Residential District
   f. R-2 Low and Medium Density Residential District
   g. R-3 Multiple Family Residential District
   h. R-B Residential Business Transitional District

[5, 16] 2. **Business Districts.**

   a. B-1, Neighborhood Business District
   b. B-2, General Business District
   c. B-3, Highway Business and Warehouse District
   d. B-4, Limited Business District
   e. B-W, Business/Warehousing

3. **Industrial Districts.**

   a. I, Industrial District

[11] 4. **Public-Institutional District**

   a. P-I, Public/Institutional District

5. **Special Overlay Districts.**

   a. River Impact District

401.20.B. Map. The location and boundaries of the districts established by this Ordinance are hereby set forth on the Zoning Map entitled “Zoning Map of Oak Park Heights”. Said map on file with the City Administrator, and hereinafter referred to as the “Zoning Map”, which map and all of the notations, references and other information shown thereon shall have the same force and effect as if fully set forth herein and hereby made a part of this Ordinance by reference.

401.20.C. Annexed Territory. Newly annexed territory shall be initially zoned under the “O” District.

401.20.D. Zoning District Boundaries. Zoning district boundary lines of this Ordinance follow lot lines, railroad right-of-way lines, the center of water courses or the corporate limit lines, all as they exist upon the effective date of this Ordinance.

1. Appeals and questions of doubt concerning the exact location of a zoning district boundary line shall be heard by the City Council serving as the Board of Adjustment and Appeals.

2. When any street, alley or other public right-of-way vacated by official action of the City, the zoning district abutting the centerline of said alley or other public right-of-way shall not be affected by such proceeding.

[11] 401.21. O, OPEN SPACE CONSERVATION DISTRICT

401.21.A. Purpose. The O, Open Space Conservation District is intended to provide a district which will allow suitable areas of the City to be retained and utilized for open space, agricultural uses and provide a Aholding@ zone for newly annexed lands to ensure that development will be staged to maintain reasonable economy in public expenditures for public utilities and service.

401.21.B. Permitted Uses.

1. Farming and agricultural related buildings and structures subject to Minnesota Pollution Control Standards, but not including commercial feedlots or other commercial operations.

2. Nurseries, tree farms and greenhouses all for the growing of plants, but not to include retail sales.

3. Single family dwellings.

4. Essential services.

5. Day care facilities serving twelve (12) or fewer persons.

6. Residential care facilities serving six (6) or fewer persons.

7. Cellular telephone antennas located on a public structure as regulated in Section 401.15.P of this Ordinance.

401.21.C. Interim Uses.

1. None.

401.21.D. Accessory Uses.

1. Operation and storage of such vehicles, equipment and machinery which are incidental to permitted or conditional uses allowed in this district.

2. Not more than four (4) boarders and/or roomers by a resident family.

3. Living quarters of persons employed on the premises.

4. Home occupations.

5. Recreational vehicles and equipment.

6. Swimming pool, tennis courts and other recreational facilities which are operated for the enjoyment and convenience of the residents of the principal use and their guests, when fully in compliance with all applicable State standards.

7. Tool houses, sheds and similar buildings for storage of domestic supplies and non-commercial recreational equipment.

8. Private garages, parking spaces and carports for licensed and operable passenger cars and trucks.

9. Radio and television antennas including single satellite dish TVROs one (1) meter or less in diameter, short-wave radio dispatching antennas, or those necessary for the operation of household electronic equipment including radio receivers, federally licensed amateur radio stations and television receivers, as regulated in Section 401.15.P of this Ordinance.

[26]10. Solar energy systems, ground source heat pumps and wind energy systems as regulated in Section 401.17 of this Ordinance.

401.21.E. Conditional Uses.

1. Single satellite dish TVROs greater than one (1) meter in diameter provided that:

   a. The provisions of Section 401.03.A.8 and Section 401.15.P of this Ordinance are considered and satisfactorily met.

2. Cellular telephone antennas not located on a public structure provided that:

   a. The provisions of Section 401.03.A.8 and Section 401.15.P of this Ordinance are considered and satisfactorily met.

401.22. R-1, SINGLE FAMILY RESIDENTIAL DISTRICT

401.22.A. Purpose. The purpose of the R-1, Single Family District is to provide for low density single family detached residential dwelling units and directly related, complementary uses.

401.22.B. Permitted Uses. The following are permitted uses in an R-1 District:

1. Single family detached dwellings.

2. City parks and playgrounds.

3. Day care facilities serving twelve (12) or fewer persons.

4. Residential care facilities serving six (6) or fewer persons.

5. Cellular telephone antennas located on a public structure as regulated in Section 401.15.P of this Ordinance.

401.22.C. Interim Uses. The following are interim uses in an R-1 District:

1. None.

401.22.D. Accessory Uses. The following are permitted accessory uses in an R-1 District:

1. Private garages, parking spaces and carports for licensed and operable passenger cars and trucks not to exceed a gross capacity of twelve thousand (12,000) pounds, as regulated by Section 401.15.F. (Off-Street Parking) of this Ordinance. Private garages are intended for use to store the private passenger vehicles of the family or families residing upon the premises, and in which no business service or industry is carried on.

2. Recreational vehicles and equipment.

3. Home occupations.

4. Private swimming pools when fully in compliance with all applicable State standards.

5. Tool houses, sheds and similar buildings for storage of domestic supplies and non-commercial recreational equipment.

6. Public parks and playgrounds.

7. Essential services.

8. Radio and television antennas including single satellite dish TVROs one (1) meter or less in diameter, short-wave radio dispatching antennas, or those necessary for the operation of household electronic equipment including radio receivers, federally licensed amateur radio stations and television receivers, as regulated in Section 401.15.P of this Ordinance.

[26] 9. Solar energy systems, ground source heat pumps and wind energy systems as regulated in Section 401.17 of this Ordinance.

401.22.E. Conditional Uses. The following are conditional uses in an R-1 District. (Requires a conditional use permit based upon procedures set forth in and regulated by Section 401.03 of this Ordinance.)

1. Public or semi-public recreational buildings and neighborhood or community centers, public and private educational institutions limited to elementary, junior high and senior high schools; and religious institutions such as churches, chapels, temples and synagogues provided that:

   a. Side yards shall be double that required for the district, but no greater than fifty (50) feet.

   b. Adequate screening from abutting residential uses and landscaping is provided in compliance with Section 401.15.E. of this Ordinance.

   c. Adequate off-street parking and access is provided on the site or on lots directly abutting across a public street or alley to the principal use in compliance with Section 401.15.F. of this Ordinance and that such parking is adequately screened and landscaped from surrounding and abutting residential uses in compliance with Section 401.15.E. of this Ordinance.

   d. Adequate off-street loading and service entrances are provided and regulated where applicable by Section 401.03.F of this Ordinance.

   e. The provisions of Section 401.03.A.8 of this Ordinance are considered and satisfactorily met.

2. Water supply buildings, reservoirs, wells, elevated tanks and similar essential public utility and service structures.

[10] 3. Bed and breakfast facilities providing that the following criteria are met. For the purpose of this Ordinance, bed and breakfast units shall include those rooms that

are provided to transient guests for compensation, but not including those rooms used by the owner occupants:

a. A maximum of six (6) bed and breakfast units may be established within a structure, unless as noted in item b, lot size would allow for more, but not to exceed a maximum of ten (10) units.

b. The parcel on which the bed and breakfast is located shall accommodate at least three thousand (3,000) square feet of lot area per bed and breakfast unit inclusive of the owner-occupants' living quarters.

c. The facility shall have a State issued license for lodging and food service, and comply with and maintain all health, safety, building, and fire codes as may be required or applicable.

d. The fee owner shall be in residence of the structure and shall maintain same as their homestead and demonstrate that the structure is in part classified as homestead for tax purposes.

e. All bed and breakfast units shall be established within the principal structure.

f. The original principal structure used for the bed and breakfast shall have a minimum size of one thousand seven hundred fifty (1,750) gross square feet.

g. No bed and breakfast facility shall be located closer than at least nine hundred (900) feet from other bed and breakfast facilities as measured from property lines.

h. Any structure proposed to be used for a bed and breakfast must have historic significance. Historic significance is demonstrated by:

    1) Structures that are on the National Register of Historic properties and are substantially intact.

    2) Structures that are at least eighty (80) years of age and are substantially intact.

    3) Structures that can demonstrate historic significance as determined by the City Council.

i. No more than the equivalent of two (2) full time persons shall be employed by the bed and breakfast facilities who are not residents of the structure.

j. Dining and other facilities shall not be opened to the public but shall be used exclusively by the residents, registered guests of the facility, or guests of a meeting held at the facility.

k. The owner-occupant of the bed and breakfast shall be allowed to host small groups and meetings if the facility contains at least one thousand (1,000) square feet of area for this purpose as well as a commercial kitchen that complies with all health, safety, and building code standards. Groups and meetings shall be limited to no more than two (2) persons per bed and breakfast unit. The owners of a bed and breakfast may request a permit for special events that will exceed the two persons per unit limit requiring submittal of an application and consideration of approval by the Community Development Director.

l. Two (2) off-street parking spaces shall be provided for the facility plus one (1) for each bed and breakfast unit. Parking areas shall be screened and landscaped and no parking space shall be located in the front yard of the property, other than on an existing driveway. The parking areas shall be improved with asphalt, but shall be exempt from other commercial parking requirements of the Zoning Ordinance.

12 m. All signing and informational or visual communication devices shall be in compliance with Section 401.15.G of this Ordinance.

n. Adequate lighting shall be provided between the principal structure and the parking area for the safety of guests. All external lighting shall be regulated by conditional use permit.

o. All bed and breakfast conditional use permits shall be reviewed annually by the Community Development Department. If violations of City ordinances, Building Code, or conditions of approval are found, the Community Development Director shall schedule a public hearing of the Planning Commission to consider the conditional use permit and conditions. Upon a Planning Commission recommendation, the City Council may make adjustments to or cancel the conditional use permit.

p. The provisions of Section 401.03.A.7 of this Ordinance are considered and satisfactorily met.

4. Residential planned unit development as regulated by Section 401.06 of this Ordinance.

5. Single satellite dish TVROs greater than one (1) meter in diameter provided that:

a. The provisions of Section 401.03.A.8 and Section 401.15.P of this Ordinance are considered and satisfactorily met.

6. Cellular telephone antennas not located on a public structure provided that:

a. The provisions of Section 401.03.A.8 and Section 401.15.P of this Ordinance are considered and satisfactorily met.

401.23. R-1A, SINGLE FAMILY RESIDENTIAL DISTRICT

401.23.A. Purpose. The purpose of the R-1A Single Family District is to provide for low density single family detached residential dwelling units and directly related, complementary uses.

401.23.B. Permitted Uses. The following are permitted uses in an R-1A District:

1. All permitted uses in an R-1 District.

401.23.C. Interim Uses. The following are interim uses in an R-1A District:

1. None.

401.23.D. Accessory Uses. The following are permitted accessory uses in an R-1A District:

1. All accessory uses as allowed in an R-1 District.

401.23.E. Conditional Uses. The following are conditional uses in an R-1A District (Requires a conditional use permit based upon procedures set forth in and regulated by Section 401.03 of this Ordinance):

1. All conditional uses, subject to the same conditions, as allowed in an R-1 District.

401.24. R-1B, SINGLE FAMILY RESIDENTIAL DISTRICT

401.24.A. Purpose. The purpose of the R-1B Single Family District is to provide for low density single family detached residential dwelling units and directly related, complementary uses.

401.24.B. Permitted Uses. The following are permitted uses in an R-1B District:

1. All permitted uses in an R-1 District.

401.24.C. Interim Uses. The following are interim uses in an R-1B District:

1. None.

401.24.D. Accessory Uses. The following are permitted accessory uses in an R-1B District:

1. All accessory uses as allowed in an R-1 District.

401.24.E. Conditional Uses. The following are conditional uses in an R-1B District (Requires a conditional use permit based upon procedures set forth in and regulated by Section 401.03 of this Ordinance):

1. All conditional uses, subject to the same conditions, as allowed in an R-1 District.

401.25. R-1C, SINGLE FAMILY RESIDENTIAL DISTRICT

401.25.A. Purpose. The purpose of the R-1C Single Family District is to provide for large lot, low density single family detached residential dwelling units and directly related, complementary uses in areas of the City containing highly unique natural features and amenities.

401.25.B. Permitted Uses. The following are permitted uses in an R-1C District:

1. All permitted uses in an R-1 District.

401.25.C. Interim Uses. The following are interim uses in an R-1C District:

1. None.

401.25.D. Accessory Uses. The following are permitted accessory uses in an R-1C District:

1. All accessory uses as allowed in an R-1 District.

401.25.E. Conditional Uses. The following are conditional uses in an R-1C District (Requires a conditional use permit based upon procedures set forth in and regulated by Section 401.03 of this Ordinance):

1. All conditional uses, subject to the same conditions, as allowed in an R-1 District.

401.26. R-2, LOW AND MEDIUM DENSITY RESIDENTIAL DISTRICT

401.26.A. Purpose. The purpose of the R-2, Low and Medium Density Residential District is to provide for low to moderate density residential dwellings and directly related, complementary uses.

401.26.B. Permitted Uses. The following are permitted uses in an R-2 District:

1. All permitted uses allowed in an R-1 District.

2. Two family dwelling units.

401.26.C. Interim Uses. The following are interim uses in an R-2 District:

1. None.

401.26.D. Accessory Uses. The following are permitted accessory uses in an R-2 District:

1. All accessory uses as allowed in an R-1 District.

401.26.E. Conditional Uses. The following are conditional uses in an R-2 District: (Requires a conditional use permit based upon procedures set forth in and regulated by Section 401.03 of this Ordinance.)

1. All conditional uses, subject to the same conditions as allowed in an R-1 District.

[1] 2. Townhouses, quadraminiums, cooperatives and condominiums as defined in Section 401.02.B. of this Ordinance.

3. Multiple family dwelling structures of not more than four (4) units, provided that:

    a. The proposed site contains at least three thousand five hundred (3,500) square feet per dwelling unit.

    b. The proposed site is located adjacent to a collector or minor arterial street.

    c. At least one (1) garage space is provided for each dwelling unit.

    d. The proposed site is landscaped and screened with planting materials in compliance with Section 401.15.E. of this Ordinance.

e. The proposed structure design is reasonably compatible with its low density residential environment, as determined by the City Council.

[1] f. The provisions of Section 401.03.A.8. of this Ordinance are considered and satisfactorily met.

[3] 4. Manufactured Housing Parks. Manufactured housing parks including manufactured single family housing units, offices limited to the administration of the park, recreational buildings and structures, storm shelters, and other directly related complementary uses, provided that:

a. General Provisions for all Manufactured Home Parks.

1) Area. All land area shall be:

a) Adequately drained.
b) Landscaped to control dust.
c) Clean and free from refuse, garbage, rubbish or debris.

2) Outdoor Camping. There shall not be outdoor camping anywhere in a manufactured home park.

3) Public Access. Public access to manufactured housing parks shall be as approved by the City.

4) Building Permit. All structures (fences, storage, decks, etc.) shall require a building permit from the Building Official. Fences shall be prohibited on individual manufactured home lots.

5) Foundation Enclosure. The area beneath a manufactured home shall be enclosed except that such enclosure must have access for inspection.

6) Community Building/Emergency Storm Shelter. A manufactured home park shall have an adequate central community building and storm shelter. Such building must be constructed in conformance with Chapter 1370, Department of Administration, Minnesota State Building Code requirements for storm shelters and be provided with rest room facilities, have adequate heating in all areas, and be maintained in a safe, clean and sanitary condition. Additionally, all emergency storm protection measures shall be subject to the approval of the City Council.

7) Lot Setbacks. Individual manufactured home lot setbacks:

a) No manufactured home shall be located closer than ten (10) feet to a side or rear lot line. The front yard setback shall be at least thirty (30) feet from the street surface. On corner lots, the side yard setback shall be at least twenty (20) feet from the street surface. No manufactured home shall be located closer than thirty (30) feet from the periphery lot line of the manufactured home park.

8) Permitted Encroachments.

a) Attached steps, uncovered stoops, and landings may encroach up to five (5) feet into a side yard setback, provided that they do not exceed twenty (20) square feet in area or extend closer than ten (10) feet to a structure on an adjacent lot.

b) An eave or overhang may encroach up to one (1) foot into a front, side and rear setback.

9) Building Height Requirements. No structure shall exceed one (1) story or twenty-five (25) feet, whichever is least.

10) Utilities.

a) All manufactured home parks shall be connected to a public water and sanitary sewer system.

b) All installations for disposal of surface storm water must be approved by the City and applicable watershed district.

c) All utility connections shall be as approved by the City.

d) All utilities shall be underground. There shall be no overhead wires or supporting poles except those essential for street or other lighting purposes.

e) No obstruction shall be permitted that impedes the inspection plumbing, electrical facilities, and related manufactured home equipment.

f) The method of garbage, waste, and trash disposal must be approved by the City.

g) The owner shall pay any required sewer and water connection fees to the City.

h) The owner shall pay inspection and testing fees for utility services to the City.

11) Storage. Exterior storage on individual manufactured home lots shall comply with the provisions of Section 401.15 of this Chapter, except not more than one (1) recreational vehicle may be allowed on a lot.

12) Accessory Buildings.

a) Except as specifically regulated by this Section, all accessory buildings shall meet the applicable requirements of Section 401.15 D of this Chapter.

b) Limit. Accessory buildings including garages shall be limited to one (1) per manufactured home lot. Maximum allowable floor area shall not exceed six (6) percent of the lot size in manufactured home parks where lot size is delineated by site plan or lot markers.

c) Maximum Building Height. Fifteen (15) feet.

d) Location. The manufactured home park site plan shall designate the locations proposed for the development of garages and/or accessory buildings on each manufactured home. Said accessory buildings shall comply with the following setback requirements:

i. An accessory building shall only be located in side or rear yards.

ii. Accessory buildings shall not be located within any utility easements.

iii. All accessory buildings located on individual manufactured home unit lots shall be owned, constructed, and maintained by the manufactured home park owner. All accessory structures shall be established as part of a predetermined site plan and subject to the approval of the City Council.

e) Building Type and Construction. Any building addition shall either be manufactured or custom built of materials that are consistent or compatible to the design of the principal building. ACompatible@ means that the exterior appearance of an

accessory building is not at variance with the principal building from an aesthetic and architectural standpoint to cause:

i. A difference to a degree to cause incongruity with the principal building.

ii. A deviation from the general character of the neighborhood.

iii. A depreciation of neighborhood values or adjacent property values.

iv. A nuisance. Types of nuisance characteristics include, but are not limited to, noise, dust, odors, glare and unsightly building exterior.

b. Design Requirements for Manufactured Home Parks.

1) Park Size. The minimum area required for a manufactured home park designation shall be twenty (20) acres.

2) Lot Size. Individual manufactured home lots:

a) Lot Area. Not less than twelve thousand (12,000) square feet.

b) Lot Width. Not less than eighty (80) feet.

c) Lot Depth. Not less than one hundred (100) feet.

d) Each manufactured home lot shall have frontage on an approved roadway and the corners of each manufactured home lot shall be marked and each lot shall be numbered.

3) Parking.

a) Each manufactured home site shall have off-street parking space for two (2) passenger vehicles.

b) All parking spaces shall be hard surfaced according to specifications established by the City.

4) Internal Roads and Streets.

a) All streets shall be private streets and shall be developed with a road bed of not less than thirty-two (32) feet in width and shall meet City design specifications. Street plans shall be

subject to review and approval of the City Engineer. A reduction in the street width requirement may be allowed by conditional use permit as regulated by Section 401.03 of this Chapter provided sufficient off-street guest parking spaces, as determined by the City, are constructed and maintained at the owner/operator's expense.

b) The park shall have a street lighting plan approved by the City.

5) Recreation. All manufactured home parks shall have at least ten (10) percent of the land area developed for recreational use (tennis courts, children's play equipment), swimming pool, golf green, etc.). The recreational use shall be developed and maintained at the owner/operator's expense.

6) Landscaping.

a) Each manufactured home lot shall be provided with two (2) trees. The size and type of trees must meet the requirements of Section 401.15.E of this Chapter.

b) A landscape screen meeting the requirements of Section 401.15.E of this Chapter shall be installed and maintained around each manufactured home park.

c) All areas shall be landscaped in accordance with a landscaping plan approved by the City Council.

7) Lighting.

a) Artificial light shall be maintained during all hours of darkness in all buildings containing public toilets, laundry equipment, and the like.

b) The manufactured home park grounds shall be lighted as approved by the City from sunset to sunrise.

c) All lighting within the manufactured home park grounds shall be subject to the requirements of Section 401.15.B.7 of this Chapter.

c. Operational Standards for Manufactured Home Park.

1) Maintenance. The operator of any manufactured home park, or a duly authorized attendance and/or caretaker shall be responsible at

all times for keeping the manufactured home park, its facilities and equipment, in a clean, orderly, operable, and sanitary condition. The attendant or caretaker shall be answerable, along with said operator, for the violation of any provisions of these regulations to which said operator is subject.

2) Inspection Prior to Sale. Prior to the sale of a manufactured home within a manufactured home park, the operator of a manufactured home park or the duly authorized attendant and/or caretaker must inform the Building Official of the prospective sale and provide him with a completed copy of the Manufactured Home Safety Disclosure Form required by Minnesota Statutes, Section 327.07, Subdivision 3A.

3) Permits. Prior to a manufactured home being moved into a lot, the owner shall apply for and obtain a building permit for the (foundation) blocking to State Code and a permit for connection to public sewer and water. The application for permits shall be accompanied by a site plan, drawn to scale, detailing the unit placement, accessory structures, and setbacks.

4) Upgrading. Prior to locating a manufactured home housing unit constructed prior to 1 July 1972, on a lot within a manufactured home park within the City, said unit shall be upgraded to current life safety codes and subject to the approval of the Building Official.

d. Maintenance. All private internal streets in manufactured home parks shall be maintained by the park owner in a good state of repair, free from obstructions, encumbrances, depressions, pot holes, and break ups. Snow shall be promptly plowed and removed from streets and adjacent mail boxes and fire hydrants, so that snow or snow piles do not constitute a safety hazard to motorists and pedestrians, or constitute an obstruction to emergency service vehicles. Icy streets and areas adjacent to mail boxes shall be promptly sanded. “Promptly” shall mean no later than twenty-four (24) hours after the end of a snow fall or in the case of ice within twenty-four (24) hours after it was formed.

401.27. R-3, MULTIPLE FAMILY RESIDENTIAL DISTRICT

401.27.A. Purpose. The purpose of the R-3, Multiple Family Residential District is to provide for medium to high density housing in multiple family structures and directly related, complementary uses.

401.27.B. Permitted Uses. The following are permitted uses in an R-3 District:

1. Multiple family dwelling structures.

2. Day care facilities serving twelve (12) or fewer persons.

3. Residential care facilities serving six (6) or fewer persons in single family detached dwellings.

4. City parks and playgrounds.

5. Essential services.

6. Residential care facilities in multiple family structures housing sixteen (16) or fewer persons.

7. Cellular telephone antennas located on a public structure as regulated in Section 401.15.P of this Ordinance.

401.27.C. Interim Uses. The following are interim uses in an R-3 District:

1. None.

401.27.D. Accessory Uses. The following are permitted accessory uses in an R-3 District:

1. All permitted accessory uses allowed in an R-2 District.

2. Off-street loading.

401.27.E. Conditional Uses. The following are conditional uses in an R-3 District: (Requires a conditional use permit based upon procedures set forth in and regulated by Section 401.03 of this Ordinance.)

1. All conditional uses allowed in an R-2 District.

2. Private marina and boat storage facilities, provided that:

    a. Sufficient off-street parking area is available to accommodate all marina facility users on-site in designated and improved lots.

    b. All off-street parking and outside storage areas are fenced and screened in accordance with Section 401.15.E. of this Ordinance.

    c. Written approval from the State Fire Marshall, Federal Environmental Protection Agency, Minnesota Pollution Control Agency, and Minnesota Department of Natural Resources is obtained for any on or off-water fueling facilities.

401.28. R-B, RESIDENTIAL-BUSINESS TRANSITIONAL DISTRICT

401.28.A. Purpose. The purpose of the R-B, Residential Business Transitional District is to provide for high density residential use and for the transition in land use from residential to low intensity business allowing for the intermixing of such uses.

401.28.B. Permitted Uses. The following are permitted uses in an R-B District:

1. All permitted uses allowed in an R-3 District.

401.28.C. Interim Uses. The following are interim uses in an R-B District:

1. None.

401.28.D. Accessory Uses. The following are permitted accessory uses in an R-B District:

1. All permitted accessory uses as allowed in an R-3 District.

2. Commercial vehicle parking.

401.28.E. Conditional Uses: The following are conditional uses in an R-B District: (Requires a conditional use permit based upon procedures set forth in and regulated by Section 401.03 of this Ordinance.)

1. All conditional uses, subject to the same conditions, as allowed in an R-3 District.

2. Medical offices and clinics, dental offices and clinics, professional offices and commercial (leased) offices (limited to appraisers, architects, attorneys, certified public accountants, clergymen, dentists, engineers, manufacturers' representatives, physicians, real estate agents, mail order businesses, and other similar uses which have no exterior storage of merchandise, and are service oriented with no retail sale of goods on the premises), and funeral homes and mortuaries provided that:

    a. The site and related parking and service entrances are served by an arterial or collector street of sufficient capacity to accommodate the traffic which will be generated.

    b. Adequate off-street parking is provided in compliance with Section 401.15.F. of this Ordinance.

c. Adequate off-street loading is provided in compliance with Section 401.15.F. of this Ordinance.

d. Vehicular entrances to parking or service areas shall create a minimum of conflict with through traffic movement.

e. When abutting an R-1, R-2, or R-3 District, a buffer area with screening and landscaping in compliance with Section 401.15.E. of this Ordinance shall be provided.

f. All signing and information or visual communication devices shall be in compliance with Section 401.15.G. of this Ordinance.

g. The provisions of Section 401.03.A.8 of this Ordinance are considered and satisfactorily met.

3. Nursing homes and similar group housing, but not including hospitals, sanitariums or similar institutions, provided that:

a. Side yards are double the minimum requirements established for this district and are screened in compliance with Section 401.15.E. of this Ordinance.

b. Only the rear yard shall be used for play or recreational areas. Said area shall be fenced and controlled and screened in compliance with Section 401.15.E. of this Ordinance.

c. All signing and informational or visual communication devices shall be in compliance with Section 401.03.G. of this Ordinance.

d. The site shall be served by an arterial or collector street of sufficient capacity to accommodate traffic which will be generated.

e. All State laws and statutes governing such use are strictly adhered to and all required operating permits are secured.

f. Adequate off-street parking is provided in compliance with Section 401.15.F of this Ordinance.

g. One (1) off-street loading space in compliance with Section 401.15.F. of this Ordinance is provided.

h. The provisions of Section 401.03.A.8 of this Ordinance are considered and satisfactorily met.

4. Apartment Density Bonus. Except for elderly housing, a maximum of twenty (20) percent reduction in square feet of lot area per unit for multiple family dwellings of

ten (10) units or more as required in Section 401.15.C. of this Ordinance based upon the following bonus features and square foot reduction:

	Bonus Feature	Square Foot Reduction Per Unit
a.	Type two construction	150 square feet
b.	Elevator serving each floor	50 square feet
c.	One-half (2) of the required free parking underground or within the principal structure (not including attached or detached garages)	150 square feet
d.	One-half (2) of the required parking within attached or detached garages	50 square feet
e.	Indoor recreation and social rooms equal to twenty-five (25) square feet per unit or seven hundred fifty (750) square feet total, whichever is greater	50 square feet
f.	Major outdoor recreational facilities such as swimming pools, tennis courts or similar facilities requiring a substantial investment equaling at minimum five (5) percent of the construction cost of the principal structure	25 square feet

5. Retail commercial activities provided that:

   a. Merchandise is sold at retail.

   b. The retail activity is located within a structure whose principal use is not commercial sales.

   c. The retail activity shall not occupy more than fifteen (15) percent of the gross floor area of the building.

   d. The retail activity is not located within a structure whose principal use is residential.

   e. No directly or indirectly illuminated sign or sign in excess of ten (10) square feet identifying the name of the retail business shall be visible from the outside of the building.

f. No signs or posters of any type advertising products for sale shall be visible from the outside of the building.

g. The provisions of Section 401.03.A.8. of this Ordinance are considered and satisfactorily met.

6. Buildings combining residential and non-residential uses allowed in this district provided that:

a. Residential and non-residential uses shall not be contained on the same floor.

b. The residential and non-residential uses shall not conflict in any manner.

c. The residential building standards as outlined in this section are met.

d. The provisions of Section 401.03.A.8 of this Ordinance are considered and satisfactorily met.

7. Elderly (senior citizen) housing provided that:

a. Not more than ten (10) percent of the occupants may be persons sixty (60) years of age or under (spouse of a person over sixty (60) years of age or caretakers, etc.).

b. Except for caretaker units, occupancy shall be limited to man and wife, blood relatives, or a single man or single woman.

c. To continue to qualify for the elderly housing classification, the owner or agency shall annually file with the City Clerk and the Building Official a certified copy of a monthly resume of occupants of such a multiple dwelling, listing the number of tenants by age and clearly identifying and setting forth the relationship of all occupants sixty (60) years of age or under to qualified tenants, or to the building.

d. There is adequate off-street parking in compliance with Section 401.15.F. of this Ordinance.

e. One (1) off-street loading space in compliance with Section 401.03.F of this Ordinance.

f. Parking areas are screened and landscaped from view of surrounding and abutting residential districts in compliance with Section 401.15.E. of this Ordinance.

g. The site of the principal use and its related parking is served by an arterial or collector street.

h. All signing and informational or visual communication devices shall be in compliance with Section 401.15.G. of this Ordinance.

i. The principal use structure is in compliance with the Minnesota State Uniform Building Code.

j. Elevator services is provided to each floor level.

k. Useable open space as defined in Section 401.02.B. of this Ordinance at a minimum equal to twenty (20) percent of the gross lot area.

l. The provisions of Section 401.03.A.8 of this Ordinance are considered and satisfactorily met.

8. Buildings in excess of three (3) stories or thirty-five (35) feet provided that:

a. The site is capable of accommodating the increased intensity of use.

b. The increased intensity of use does not cause an increase in traffic volumes beyond the capacity of the surrounding streets.

c. Public utilities and services are adequate.

27 d. For each additional story over three (3) stories or for each additional ten (10) feet above thirty-five (35) feet, front and side yard setback requirements shall be increased ten (10) feet.

27 e. The project shall comply with the Minnesota Sustainable Building 2030 (SB2030) energy standards and Minnesota Sustainable Building Guidelines (B3) or as amended.

27 f. There shall be no parking in the yards facing adjacent rights of way.

27 g. On the third and upper floors, windows and/or architectural features that provide interest shall be included on all four sides of the building when permitted within the building code.

27 h. Abrupt changes in building heights and/or roof orientation shall be diminished by offsets of building form and mass.

27 i. Recesses and projections to visually divide building surfaces into smaller scale elements shall be included.

[27] j. Color shall be used to visually reduce the size, bulk and scale of the building.

[27] k. Buildings forty (40) feet or over shall provide rooflines with articulated features.

[27] l. Location of back flow prevention devices and the fire sprinkler riser shall be identified on project plans submitted for site and design review and shall be located inside the building.

[27] m. The provisions of Section 401.03.A.8 of this Ordinance are considered and satisfactorily met.

9. Limited warehousing activities provided that:

a. Limited warehousing operations that include offices shall be subject to the additional conditions found in Section 401.28.E.2.

b. Limited warehousing operations that include retail commercial activities shall be subject to the additional conditions found in Section 401.28.E.5.

c. No outside storage of goods and materials is associated with the use. All business related materials shall be completed enclosed within a permanent structure.

d. Warehousing goods and materials shall be non-explosive.

e. The architectural appearance and functional plan of the building and site shall not be so dissimilar to the existing buildings or area as to cause impairment in property values or constitute a blighting influence.

f. All lighting shall be hooded and so directed that the light source is not visible from the right-of-way or from a residential zone or use.

g. Adequate screening and landscaping from neighboring residential districts is provided in accordance with Section 401.15.E. of this Ordinance.

h. There shall be no idling of unattended vehicles allowed on the premises at any time.

i. Business activities shall not be permitted before 6:00 am or after 6:00 pm or on Sundays.

j. All signing and informational or visual communication devices shall be minimized and shall be in compliance with Section 401.15.G. of this Ordinance.

k. The provisions of Section 401.03.A.8 of this Ordinance are considered and satisfactorily met.

401.29. B-1, NEIGHBORHOOD BUSINESS DISTRICT

401.29.A. Purpose. The purpose of the B-1, Neighborhood Business District is to provide for the establishment of local centers for convenient, limited office, retail or service outlets which deal directly with the customer for whom the goods or services are furnished. These centers are to provide services and goods only for the surrounding neighborhoods and are not intended to draw customers from the entire community.

401.29.B. Permitted Uses. The following are permitted uses in a B-1 District:

1. Barber shops.

2. Beauty parlors.

3. Essential services.

4. Convenience grocery stores (not supermarket type).

5. Laundromat, self-service washing and drying.

6. Cellular telephone antennas located on a public structure, as regulated in Section 401.15.P of this Ordinance.

401.29.C. Interim Uses. The following are interim uses in a B-1 District:

1. None.

401.29.D. Accessory Uses. The following are permitted accessory uses in a B-1 District:

1. Commercial or business buildings and structures for a use accessory to the principal use but such use shall not exceed thirty (30) percent of the gross floor space of the principal use.

2. Off-street parking is regulated by Section 401.15.F. of this Ordinance, but not including semi-trailer trucks.

3. Off-street loading as regulated by Section 401.15.F of this Ordinance.

4. Radio and television receiving antennas including single satellite dish TVROs two (2) meters or less in diameter, short-wave radio dispatching antennas, or those necessary for the operation of household electronic equipment including radio

receivers, federally licensed amateur radio stations and television receivers, as regulated in Section 401.15.P of this Ordinance.

[26] 5. Solar energy systems, ground source heat pumps and wind energy systems as regulated in Section 401.17 of this Ordinance.

401.29.E. Conditional Uses. The following are conditional uses in a B-1 District: (Requires a conditional use permit based upon procedures set forth in and regulated by Section 401.03 of this Ordinance.)

1. Governmental and public utility buildings and structures necessary for the health, safety and general welfare of the community, provided that:

    a. Conformity with the surrounding neighborhood is maintained and required setbacks and side yard requirements are met.

    b. Equipment is completely enclosed in a permanent structure with no outside storage.

    c. Adequate screening and landscaping from neighboring residential districts is provided in accordance with Section 401.15.E. of this Ordinance.

    d. The provisions of Section 401.03.A.8 of this Ordinance are considered and satisfactorily met.

2. Professional and commercial (leased) offices provided that:

    a. The services which are provided are for the local area rather than the community or region.

    b. The traffic generated will not raise traffic volumes beyond the capacity of the surrounding streets.

    c. The architectural appearance of the building housing the office use shall reflect the building character of the area and shall not be so dissimilar as to cause impairment of property values or constitute a blighting influence within the neighborhood.

    d. The provisions of Section 401.03.A.8 of this Ordinance are considered and satisfactorily met.

3. Commercial planned unit development as regulated by Section 401.06 of this Ordinance.

4. Cellular telephone antennas not located on a public structure, provided that:

a. The provisions of Section 401.03.A.8 and Section 401.15.P of this Ordinance are considered and satisfactorily met.

401.30. B-2, GENERAL BUSINESS DISTRICT

401.30.A. Purpose. The purpose of the B-2, General Business District is to provide for high intensity, retail or service outlets which deal directly with the customer for whom the goods or services are furnished. The uses allowed in this district are to provide goods and services on a community market scale and located in areas which are well served by collector or arterial street facilities.

401.30.B. Permitted Uses. The following are permitted uses in a B-2 District:

1. Any permitted use in the B-1 District.

2. Banks, savings institutions, credit unions and other financial institutions.

3. Business, commercial, or trade schools.

4. Clinics, for people only.

5. Day care - group nursery (within single occupancy freestanding building).

6. Government and public utility buildings.

7. Motels, motor hotels and hotels provided that the lot area contains not less than five hundred (500) square feet of lot area per unit.

8. Restaurants, cafes, tea rooms, taverns and off-sale liquor.

9. Retail sales.

10. Commercial service uses.

11. Commercial recreation.

12. Libraries.

13. Offices, business or professional, including ticket sales.

14. Optical laboratories.

15. Sexually oriented use - principal and accessory.

16. Theaters, excluding drive-in type of service.

401.30.C. Interim Uses. The following are interim uses in a B-2 District:

[18] 1. Private and public elementary, junior or senior high schools for a time period not to exceed two (2) years provided that:

a. Adequate screening from abutting residential uses and landscaping is provided in compliance with Section 401.15.E. of this Ordinance.

b. Adequate off-street parking and access is provided on the site or on lots directly abutting across a public street or alley to the principal use in compliance with Section 401.15.F of this Ordinance and that such parking is adequately screened and landscaped from surrounding and abutting residential uses in compliance with Section 401.15.E of this Ordinance.

c. If outdoor recreation or playfields are proposed, adequate screening and fencing from abutting residential uses is provided in compliance with Section 401.15.E of this Ordinance.

d. Adequate off-street loading and service entrances are provided and regulated where applicable by Section 401.03.F of this Ordinance.

e. Adequate emergency vehicle access is provided to and within the site.

f. The site is served by an arterial or collector street of sufficient capacity to accommodate the traffic that will be generated.

g. The provisions of Section 401.05.C and 401.03.A of this Ordinance are considered and satisfactorily met.

401.30.D. Accessory Uses. The following are permitted accessory uses in a B-2 District:

1. All permitted accessory uses as allowed in a B-1 District.

2. Semi-Truck parking.

[28] 3. Temporary outside sales, such as garden centers, garden produce sales, fireworks sales, or holiday decoration/tree sales as a yearly administrative permit subject to review and approval of the Zoning Administrator and subject to the following conditions:

a. Outside sales are fenced or screened from view of neighboring residential uses or an abutting residential district in compliance with Section 401.15.E of this Ordinance.

b. All lighting shall be hooded and so directed that the light source shall not be visible from the public right-of-way or neighboring residences and shall be in compliance with Section 401.15.B.7 of this Ordinance.

c. Sales and storage area is blacktopped or concrete surfaced.

d. The architectural appearance, scale, construction materials, and functional plan of the structure and site shall not cause impairment in property values, or constitute a blighting influence within a reasonable distance of the site.

e. Adequate analysis and provisions are made to resolve issues related to provision of water and electricity to the site and the demand for City services. No use shall be allowed that will exceed the City's ability to provide utility, police, fire, administrative or other services to the site.

f. Facilities on site shall not be operated between the hours of 10:00 PM and 6:00 AM unless otherwise allowed by formal action of the City Council.

g. Provisions are made to control and reduce noise in accordance with Section 401.15.B.11 of this Ordinance.

h. If the use is covering existing parking stalls, there shall be adequate excess parking on site so that all parking requirements are complied with.

i. The location of the use shall create a minimum of conflict with traffic movement, shall comply with Section 401.15.F of this Ordinance, and shall be subject to the approval of the City Engineer.

j. Any required drainage systems shall be subject to the approval of the City Engineer and reviewed by applicable watershed if required.

k. All signing and informational or visual communication devices shall be minimized and shall be in compliance with Section 401.15.G of this Ordinance.

l. The provisions of Section 401.03.A.7 of this Ordinance are considered and satisfactorily met.

m. The owner of the property must additionally approve the placement of the temporary facilities by co-signing any required application; if such vendor is not directly related to the owner, the owner shall also be subject to additional enforcement actions should the vendor not comply with requirements herein or within this Ordinance.

n. The City may revoke the Temporary Outside Sales Permit at any time should the operation become a public nuisance or hazard as defined by the City.

o. One Temporary Outside Sales Permit shall be allowed per site. No Temporary Outside Sales Permit shall exceed 120 calendar days per year. The City Administrator may issue 30 calendar days extensions if applied for prior to the conclusion of the initial 120 day time period.

[29] 4. Animal care services to include daycare, grooming and other related services, and limited overnight boarding of animals as a yearly administrative permit subject to review and approval of the Zoning Administrator and subject to the following conditions:

a. Overnight boarding of an animal is limited to no more than fourteen consecutive nights.

b. Adequate analysis and provisions are made to resolve issues related to provision of water and electricity to the site and the demand for City services. No use shall be allowed that will exceed the City's ability to provide utility, police, fire, administrative or other services to the site.

c. The facility shall not be open to the public between the hours of 10:00 PM and 5:00 AM unless otherwise allowed by formal action of the City Council.

d. Provisions are made to control and reduce noise in accordance with Section 401.15.B.11 of this Ordinance. Animal noise shall not create issues for adjacent properties or for tenants within a multi-tenant building.

e. All animal waste shall be immediately disposed of in sealed containers and removed from the site on a regular basis so as not to create issues with odor. Odor from the business shall not create issues for adjacent properties or tenants within a multi-tenant building.

f. Animals shall be leashed at all times they are outside of the building.

g. The owner of the property must additionally approve the placement of the facilities by co-signing any required application; if such vendor is not directly related to the owner, the owner shall also be subject to additional enforcement actions should the vendor not comply with requirements herein or within this Ordinance.

h. The City may revoke the Animal Care Services Permit at any time should the operations become a public nuisance or hazard as defined by the City.

i. All signing and informational or visual communication devices shall be minimized and shall be in compliance with Section 401.15.G of this Ordinance.

j. The provisions of Section 401.03.A.7 of this Ordinance are considered and satisfactorily met.

401.30.E. Conditional Uses. The following are conditional uses in a B-2 District: (Requires a conditional use permit based upon procedures set forth in and regulated by Section 401.03 of this Ordinance).

1. Drive-in and convenience food establishments provided that:

a. The architectural appearance and functional plan of the building and site shall not be so dissimilar to the existing buildings or area as to cause impairment in property values or constitute a blighting influence within a reasonable distance of the lot.

b. At the boundaries of a residential district, a strip of not less than five (5) feet shall be landscaped and screened in compliance with Section 401.15.E. of this Ordinance.

c. Each light standard island and all islands in the parking lot landscaped or covered.

d. Parking areas shall be screened from view of abutting residential districts in compliance with Section 401.15.E. of this Ordinance.

e. Parking areas and driveways shall be curbed with continuous curbs not less than six (6) inches high above the parking lot or driveway grade.

f. Vehicular access points shall be limited, shall create a minimum of conflict with through traffic movements, shall comply with Section 401.15.F. of this Ordinance and shall be subject to approval of the City Engineer.

g. All lighting shall be hooded and so directed that the light source is not visible from the public right-of-way or from an abutting residence and shall be in compliance with Section 401.15.B.7. of this Ordinance.

h. The entire area shall have a drainage system which is subject to the approval of the City Engineer.

i. The entire area other than occupied by buildings or structures or plantings shall be surfaced with a material which will control dust and drainage and which is subject to the approval of the City Engineer.

j. All signing and informational or visual communication devices shall be in compliance with Section 401.15.G. of this Ordinance.

k. The provisions of Section 401.03.A.8 of this Ordinance are considered and satisfactorily met.

2. Car washes (drive through, mechanical and self-service) provided that:

a. The architectural appearance and functional plan of the building and site shall not be dissimilar to the existing buildings or area as to cause impairment in property values or constitute a blighting influence within a reasonable distance of the lot.

b. Magazining or stacking space is constructed to accommodate that number of vehicles which can be washed during a maximum thirty (30) minute period and shall be subject to the approval of the City Engineer.

c. At the boundaries of a residential district, a strip of not less than five (5) feet shall be landscaped and screened in compliance with Section 401.15.E. of this Ordinance.

d. Parking or car magazining storage space shall be screened from view of abutting residential districts in compliance with Section 401.15.E. of this Ordinance.

e. The entire area other than occupied by the building or plantings shall be surfaced with material which will control dust and drainage which is subject to the approval of the City Engineer.

f. The entire area shall have a drainage system which is subject to the approval of the City Engineer.

g. All lighting shall be hooded and so directed that the light source is not visible from the public right-of-way or from an abutting residence and shall be in compliance with Section 401.15.B.7 of this Ordinance.

h. Vehicular access points shall be limited, shall create a minimum of conflict with through traffic movement and shall be subject to the approval of the City Engineer.

i. All signing and informational or visual communication devices shall be in compliance with Section 401.15.G. of this Ordinance.

j. Provisions are made to control and reduce noise.

k. The provisions of Section 401.03.A.8 of this Ordinance are considered and satisfactorily met.

3. Motor fuel station, auto repair-minor and tire and battery stores and service, provided that:

   a. Regardless of whether the dispensing, sale of offering for sale of motor fuels and/or oil is incidental to the conduct of the use or business, the standards and requirements imposed by this Ordinance for motor fuel stations shall apply. These standards and requirements are, however, in addition to other requirements which are imposed for other uses of the property.

   b. The architectural appearance and functional plan of the building and site shall not be so dissimilar to the existing buildings or area as to cause impairment in property values or constitute a blighting influence within a reasonable distance of the lot.

   c. The entire site other than that taken up by a building, structure or plantings shall be surfaced with a material to control dust and drainage which is subject to the approval of the City Engineer.

   d. A minimum lot area of twenty thousand (20,000) square feet and minimum lot widths of one hundred fifty (150) feet.

   e. A drainage system subject to the approval of the City Engineer shall be installed.

   f. A curb not less than six (6) inches above grade shall separate the public sidewalk from motor vehicle service areas.

   g. The lighting shall be accomplished in such a way as to have no direct source of light visible from adjacent land in residential use or from the public right-of-way and shall be in compliance with Section 401.15.B.7. of this Ordinance.

   h. Wherever fuel pumps are to be installed, pump islands shall be installed.

   i. At the boundaries of a residential district, a strip of not less than five (5) feet shall be landscaped and screened in compliance with Section 401.15.E. of this Ordinance.

   j. Parking or car magazine storage space shall be screened from view of abutting residential districts in compliance with Section 401.15.E. of this Ordinance.

   k. Vehicular access points shall create a minimum of conflict with through traffic movement, shall comply with Section 401.15.F. of this Ordinance and shall be subject to the approval of the City Engineer.

l. All signing and informational or visual communication devices shall be minimized and shall be in compliance with Section 401.15.G. of this Ordinance.

m. Provisions are made to control and reduce noise.

[1] n. No outside storage except as allowed in compliance with Section 401.30.E.5 of this Ordinance.

[1] o. Sale or products other than those specifically mentioned in this subdivision be subject to a conditional use permit and be in compliance with Section 401.30.E.6 of this Ordinance.

p. All conditions pertaining to a specific site are subject to change when the Council, upon investigation in relation to a formal request, finds that the general welfare and public betterment can be served as well or better by modifying the conditions.

q. The provisions of Section 401.03.A.8 of this Ordinance are considered and satisfactorily met.

r. The City may allow a motor fuel pump canopy to encroach ten (10) feet into a required setback provided the canopy support structure does not encroach on the setback and the setback encroachment will not result in an obstruction of traffic visibility.

4. Custom manufacturing, restricted production and repair limited to the following: art, needlework, jewelry from precious metals, watches, dentures, optical lenses and medical supplies, provided that:

a. Such use is accessory as defined by Section 401.02.B. of this Ordinance to the principal use of the property.

b. Does not conflict with the character of development intended for this district.

c. The provisions of Section 401.03.A.8 of this Ordinance are considered and satisfactorily met.

5. Open and outdoor storage as an accessory use provided that:

a. The area is fenced and screened from view of neighboring residential uses or if abutting a residential district in compliance with Section 401.15.E. of this Ordinance.

b. Storage is screened from view from public right-of-way in compliance with Section 401.15.E. of this Ordinance.

c. Storage area is grassed or surfaced to control dust.

d. All lighting shall be hooded and so directed that the light source shall not be visible from the public right-of-way or from neighboring residences and shall be in compliance with Section 401.15.B.7 of this Ordinance.

e. The provisions of Section 401.03.A.8 of this Ordinance are considered and satisfactorily met.

[6] 6. Open and outdoor services, sale, and rental as a principal or accessory use and automobile repair minor as an accessory use including new or used automotive, trucks, boats, or motorized vehicles and related accessory sales and provided that:

a. Outside sales areas are fenced or screened from view of neighboring residential uses or an abutting residential district in compliance with Section 401.15.E of this Ordinance.

b. All lighting shall be hooded and so directed that the light source shall not be visible from the public right-of-way or from neighboring residences and shall be in compliance with Section 401.15.B.7 of this Ordinance.

c. Sales and storage area is blacktopped or concrete surfaced and all paved areas are surrounded by concrete curbing.

d. The architectural appearance, scale, construction materials, and functional plan of the building and site shall not be dissimilar to the existing nearby commercial and residential buildings, and shall not cause impairment in property values, or constitute a blighting influence within a reasonable distance of the site.

e. Adequate analysis and provisions are made to resolve issues related to demand for services. No use shall be allowed that will exceed the City=s ability to provide utility, police, fire, administrative or other services to the site.

f. All islands in the parking lot shall be landscaped.

g. A strip of not less than ten (10) feet shall be landscaped at the edge of all parking/driveway areas adjacent to lot lines and the public right-of-way.

h. All automobile repair activities shall be conducted within the principal structure and the doors to the service bays shall be kept closed except when vehicles are being moved in or out of the service areas.

i. Facilities on a site contiguous to any residential district shall not be operated between the hours of 10:00 PM and 6:00 AM unless otherwise allowed by formal action of the City Council.

j. Provisions are made to control and reduce noise in accordance with Section 401.15.B.11 of this Ordinance.

k. Vehicular access points shall create a minimum of conflict with through traffic movement, shall comply with Section 401.15.F of this Ordinance and shall be subject to the approval of the City Engineer.

l. A drainage system subject to the approval of the City shall be installed.

m. All signing and informational or visual communication devices shall be minimized and shall be in compliance with Section 401.15.G of this Ordinance.

n. The provisions of Section 401.03.A.7 of this Ordinance are considered and satisfactorily met.

7. Commercial planned unit development as regulated by Section 401.06 of this Ordinance.

8. Day care - group nursery (within multiple occupancy building) provided that:

a. Use Compatibility. The operation and function of the day care facility must be compatible with other existing uses within the building. This compatibility is to be based upon the nature of the day care use in relation to the operation of the other existing uses within the building and the satisfactory resolution of conditions (b-g) of this Ordinance.

b. Building Plans. The building plans for the construction or alteration of a structure that is to be used for a day care facility shall be submitted to the City for review by the City Building Official to determine compliance with the State Building Code. The facility shall also meet the following conditions:

1) The architectural appearance and functional plan of the building and site shall not be so dissimilar to the existing buildings or area as to cause impairment of property values or constitute a blighting influence within a residential distance of the lot.

2) The day care facility shall be located in a portion of the building separated from the other uses located within the structure.

3) The day care facility shall be adequately sound-proofed to remove extraneous noise that would interfere with the day care operation and

would affect the health, safety and welfare of the day care participants. Adequate sound-proofing must also be provided to prevent disruptive noise generated by the day care facility from interfering with the operation of the adjacent uses within the building.

4) Internal and external site land use compatibility and sufficient peripheral area protection shall be provided by the day care facility.

c. Screening. Where any outdoor recreational or play area for the day care facility abuts any commercial or industrial use or zoned property, the play area shall be screened along all exposed perimeters. All of the required fencing and screening shall comply with the fencing and screening requirements in Section 401.15.E. of this Ordinance.

d. Parking. When a day care facility is within a structure containing another principal use, each use shall be calculated separately for determining the total off-street parking spaces required.

e. Loading. One (1) off-street loading space in compliance with Section 401.15.F. of this Ordinance shall be provided.

f. Signage. All signing and informational or visual communication devices shall be in compliance with Section 401.15.G. of this Ordinance.

g. Conditional Use and State Regulations. Day care group nursery facilities shall be subject to the regulations and procedures of Section 401.03 of this Ordinance and the minimum licensing requirements, as may be amended, of the Minnesota Department of Human Services.

9. Cellular telephone antennas not located on a public structure, provided that:

a. The provisions of Section 401.03.A.8 and Section 401.15.P of this Ordinance are considered and satisfactorily.

[6] 10. Automobile repair-major as an accessory use limited only to new and used automobile dealerships not including truck or other vehicle repair, provided that:

a. Outside sales areas are fenced or screened from view of neighboring residential uses or an abutting residential district in compliance with Section 401.15.E of this Ordinance.

b. All lighting shall be hooded and so directed that the light source shall not be visible from the public right-of-way or from neighboring residences and shall be in compliance with Section 401.15.B.7 of this Ordinance.

c. Sales and storage area is blacktopped or concrete surfaced and all paved areas are surrounded by concrete curbing.

d. The architectural appearance, scale, construction materials, and functional plan of the building and site shall not be dissimilar to the existing nearby commercial and residential buildings, and shall not cause impairment in property values, or constitute a blighting influence within a reasonable distance of the site.

e. Adequate analysis and provisions are made to resolve issues related to demand for services. No use shall be allowed that will exceed the City's ability to provide utility, police, fire, administrative or other services to the site.

f. All islands in the parking lot shall be landscaped.

g. A strip of not less than ten (10) feet shall be landscaped at the edge of all parking/driveway areas adjacent to lot lines and the public right-of-way.

h. All automobile repair activities shall be conducted within the principal structure and the doors to the service bays shall be kept closed except when vehicles are being moved in or out of the service areas.

i. Facilities on a site contiguous to any residential district shall not be operated between the hours of 10:00 PM and 6:00 AM unless otherwise allowed by formal action of the City Council.

j. Provisions are made to control and reduce noise in accordance with Section 401.15.B.11 of this Ordinance.

k. Vehicular access points shall create a minimum of conflict with through traffic movement, shall comply with Section 401.15.F of this Ordinance and shall be subject to the approval of the City Engineer.

l. A drainage system subject to the approval of the City shall be installed.

m. All signing and informational or visual communication devices shall be minimized and shall be in compliance with Section 401.15.G of this Ordinance.

n. The provisions of Section 401.03.A.7 of this Ordinance are considered and satisfactorily met.

[27]11. Buildings in excess of three (3) stories or thirty-five (35) feet provided that:

a. The site is capable of accommodating the increased intensity of use.

b. The increased intensity of use does not cause an increase in traffic volumes beyond the capacity of the surrounding streets.

c. Public utilities and services are adequate.

d. For each additional story over three (3) stories or for each additional ten (10) feet above thirty-five (35) feet, front and side yard setback requirements shall be increased ten (10) feet.

e. The project shall comply with the Minnesota Sustainable Building 2030 (SB2030) energy standards and Minnesota Sustainable Building Guidelines (B3) or as amended.

f. There shall be no parking in the yards facing adjacent rights of way.

g. On the third and upper floors, windows and/or architectural features that provide interest shall be included on all four sides of the building when permitted within the building code.

h. Abrupt changes in building heights and/or roof orientation shall be diminished by offsets of building form and mass.

i. Recesses and projections to visually divide building surfaces into smaller scale elements shall be included.

j. Color shall be used to visually reduce the size, bulk and scale of the building.

k. Buildings forty (40) feet or over shall provide rooflines with articulated features.

l. Location of back flow prevention devices and the fire sprinkler riser shall be identified on project plans submitted for site and design review and shall be located inside the building.

m. The provisions of Section 401.03.A.8 of this Ordinance are considered and satisfactorily met.

[5] 401.300. B-3, HIGHWAY BUSINESS AND WAREHOUSING DISTRICT

401.300.A. Purpose. The purpose of the B-3, Highway Business and Warehousing District is to provide for the establishment of retail and wholesale sales, storage, warehousing and limited manufacturing and production. The overall character of the B-3 District is intended to be transitional in nature, thus uses allowed within this district shall be limited to those which can compatibly exist adjacent to commercial and lower intensity activities.

401.300.B. Permitted Uses. The following are permitted uses in a B-3 District:

1. Commercial printing establishments.

2. Commercial/professional offices.

3. Conference centers.

4. Laboratories.

5. Wholesale showrooms.

[20] 6. Motels/hotels provided that the lot area contains not less than five hundred (500) square feet of lot area per unit.

7. Banks, saving institutions, credit unions and other financial institutions without drive in facilities.

8. Clinics for people only.

9. Indoor commercial recreation not including theatres.

10. Essential services.

11. Government and public utility buildings and structures.

12. Mortuaries or funeral homes.

13. Physical fitness, health service establishments or reducing salons.

[20] 14. Retail sales.

[20] 15. Commercial service uses.

16. Cellular telephone antennas located on a public structure, as regulated in Section 401.15 of this Ordinance.

401.300.C. Interim Uses. The following are interim uses in a B-3 District:

1. None.

401.300.D. Accessory Uses. The following are permitted accessory uses in a B-3 District.

1. Commercial or business buildings and structures for a use accessory to the principal use but such use shall not exceed thirty (30) percent of the gross floor space of the principal use.

2. Off-street parking as regulated by Section 401.15.F of this Ordinance.

3. Off-street loading as regulated by Section 401.15.F of this Ordinance.

4. Radio and television receiving antennas including single satellite dish TVROs two (2) meters or less in diameter, short-wave radio dispatching antennas, or those necessary for the operation of household electronic equipment including radio receivers, federally licensed amateur radio stations and television receivers, as regulated in Section 401.15.P of this Ordinance.

5. Semi-truck parking.

6. Warehouse facilities as an accessory to a permitted or conditional use.

[26] 7. Solar energy systems, ground source heat pumps and wind energy systems as regulated in Section 401.17 of this Ordinance.

401.300.E. Conditional Uses. The following are conditional uses in a B-3 District (Requires a conditional use permit based upon procedures set forth in and regulated by Section 401.03 of this Ordinance):

1. Drive-through for banks provided that:

    a. The architectural appearance, scale, construction materials, and functional plan of the building and site shall not be dissimilar to the existing nearby commercial and residential buildings, and shall not cause impairment in property values, or constitute a blighting influence within a reasonable distance of the site.

b. Vehicular access points shall be limited and create a minimum of conflict with through traffic movements.

c. Service windows shall be allowed if the following additional criteria are satisfied:

1. Not less than one hundred eighty (180) feet of segregated automobile stacking lane(s) must be provided for the service window.

2. The stacking area and its access must be designed to control traffic in a manner to protect the pedestrians, buildings and green area on the site.

3. No part of the public street or boulevard may be used for stacking of automobiles.

4. The stacking lane, service intercom, and service window shall be designed and located in such a manner as to minimize automobile and communication noises, emissions, and headlight glare upon adjacent premises, and to maximize maneuverability of vehicles on the site. Levels of noise, light, and air quality shall occur and be measured at property lines and shall satisfy established state regulations

5. Hours of operation shall be limited as necessary to minimize the effect of nuisance factors such as traffic, noise and glare upon any neighboring uses.

6. The provisions of Section 401.03.A.7 of this Ordinance are considered and satisfactorily met.

d. Adequate analysis and provisions are made to resolve issues related to demand for services. No use shall be allowed that will exceed the City=s ability to provide utility, police, fire, administrative or other services to the site.

[20] 2. Restaurants, cafes, tea rooms, taverns, and off-sale liquor without drive-through facilities provided that:

a. No convenience food establishments with or without drive-through or drive-in facilities will be allowed.

b. Take out facilities with food and beverage served on or in disposable dishes shall not constitute more than ten (10) percent of the food service business.

c. The use obtains all local, state and federal food and beverage handling licenses and/or permits.

d. There shall be no excessive noise or odors emitted from the use.

e. There shall be no outdoor storage and/or display.

f. The hours of operation shall be limited as necessary to minimize the effect of nuisance factors such as traffic, noise and glare upon any neighboring uses.

g. Parking and loading areas are in conformance with the parking and loading requirements outlined in Section 401.15.F of this Ordinance.

h. The loading spaces shall not be located within the front yard of a lot.

i. Adequate analysis and provisions are made to resolve issues related to traffic and demand for services. No use shall be allowed that will exceed the City's ability to provide streets, utility, police, fire, administrative or other services to the site.

j. The provisions of Section 401.03.A.7 of this Ordinance are considered and satisfactorily met.

3. Open and outdoor storage including the parking of commercial vehicles in excess of that allowed as a permitted accessory use provided that:

a. The storage area is landscaped, fenced, and screened from view of neighboring uses and abutting residential districts.

b. Storage is landscaped and screened from view from the public right-of-way.

c. Storage area is blacktopped or concrete surfaced.

d. All lighting shall be hooded and so directed that the light source shall not be visible from the public right-of-way or from neighboring properties.

e. The storage area does not take up parking space or loading space as required for conformity to this Ordinance.

f. Adequate analysis and provisions are made to resolve issues related to demand for services. No use shall be allowed that will exceed the City=s ability to provide utility, police, fire, administrative or other services to the site.

g. The provisions of Section 401.03.A.7 of this Ordinance are considered and satisfactorily met.

4. Open and outdoor services, sale and rental as a principal or accessory use including new or used automotive, trucks, boats, or motorized recreational vehicle and related accessory sales and service provided that:

a. Outside sales areas are landscaped and fenced or screened from view of neighboring residential uses or an abutting residential district.

b. All lighting shall be hooded and so directed that the light source shall not be visible from the public right-of-way or from neighboring residences.

c. Areas are asphalt or concrete surfaced.

d. Adequate analysis and provisions are made to resolve issues related to demand for services. No use shall be allowed that will exceed the City=s ability to provide utility, police, fire, administrative or other services to the site.

e. The provisions of Section 401.03.A.7 of this Ordinance are considered and satisfactorily met.

[20, 30] 5. Auto and boat repair-minor, auto and boat repair-major, auto and boat washes, but not including motor fuel stations, provided that:

a. No building or structure, permanent or temporary, driveway surfaces, parking areas, advertising devices or other similar site improvements, except driveways traversing a public road boulevard, shall be located within one hundred ten (110) feet of any part of a residential district.

b. Sale of products other than those specifically mentioned in this subdivision be subject to a conditional use permit and be in compliance with Section 401.300.E.4 of this Ordinance.

c. All conditions pertaining to a specific site are subject to change when the Council, upon investigation in relation to a formal request, finds that the general welfare and public betterment can be served as well or better by modifying the conditions.

d. A strip of not less than ten (10) feet shall be landscaped at the edge of all parking/driveway areas adjacent to lot lines and the public right-of-way.

e. All automobile and boat repair activities shall be conducted within the principal structure and the doors to the service bays shall be kept closed except when vehicles are being moved in or out of the service areas.

f. Hydraulic hoists or pits and all lubrication, greasing, washing, repair or diagnostic equipment used shall be totally enclosed within a building.

g. Facilities on a site contiguous to any residential district shall not be operated between the hours of 10:00 PM and 6:00 AM unless otherwise allowed by formal action of the City Council.

h. Facilities may offer minor and major auto and boat repairs, but they shall not offer the sale or storage of junked cars or boats, or automobile wrecking.

i. The architectural appearance and functional plan of the building and site shall not be so dissimilar to the existing buildings or areas to cause impairment in property values or constitute a blighting influence within a reasonable distance of the lot.

j. The entire site other than that taken up by a building, structure or plantings shall be surfaced with a material to control dust and drainage which is subject to City approval.

k. A drainage system subject to City approval shall be installed.

l. Parking or car magazine storage space shall be screened from view of abutting residential districts in compliance with Section 401.15.E.

m. Vehicular access points shall create a minimum of conflict with through traffic movement, shall comply with Section 401.15.F of this Ordinance and shall be subject to the approval of the City Engineer.

n. Provisions are made to control and reduce noise in accordance with Section 401.15.B.11 of this Ordinance.

o. No outside storage shall be allowed except as allowed in compliance with Section 401.15.B.11 of this Ordinance.

p. The lighting shall be accomplished in such a way as to have no direct source of light visible from adjacent land in residential use or from the public right-of-way and shall be in compliance with Section 401.15.B.7 of this Ordinance.

q. All signing and informational or visual communication devices shall be minimized and shall be in compliance with Section 401.15.G of this Ordinance.

r. Adequate analysis and provisions are made to resolve issues related to demand for services. No use shall be allowed that will exceed the City's ability to provide utility, police, fire, administrative or other services to this site.

s. The provisions of Section 401.03.A.7 of this Ordinance are considered and satisfactorily met.

6. Mini-storage facilities provided that:

a. At least twenty (20) percent of the site is open, green space which is sodded and landscaped in accordance with a plan approved by the City Council.

b. Building coverage shall not exceed sixty (60) percent of the lot area.

c. Parking, loading, driveway and fire lane design shall be subject to review and approval of the City Staff and Fire Marshal.

d. Adequate space is provided for snow storage.

e. Fire hydrant location shall be subject to review and approval of the Fire Marshal.

f. All driveways and parking areas are to be hard (blacktop or concrete) surfaced and adequate turning radius for fire truck maneuverability is to be maintained throughout the site. Designated snow storage space is to be provided to insure adequate and safe access during winter months.

g. In an "on-premises" caretaker dwelling unit is provided on site, constructions of said dwelling unit shall conform to all design standard regulations for dwelling units of the Minnesota State Building Code and the Oak Park Heights Zoning and Building Code. The occupancy and minimum interior and floor area standards shall be controlled by Sections 401.15.C of this Ordinance. Off-street parking shall be made available for said dwelling unit in conformance with Section 401.15.F.

h. Any structures having exposure to an adjacent residential use or public right-of-way, park, or similar public use areas shall be of brick, rock face block, natural stone, wood, or stucco facing material.

I. No retailing, wholesaling, manufacturing, repair, or other such activity other than storage is to occur within the self storage, mini-warehousing facility.

j. Adequate analysis and provisions are made to resolve issues related to demand for services. No use shall be allowed that will exceed the City's ability to provide utility, police, fire, administrative or other services to the site.

k. The provisions of Section 401.03.A.7 of this Ordinance are considered and satisfactorily met.

7. Landscape sales and material storage provided that:

a. There are no growing fields on the site.

b. Outdoor sales/display area shall be limited to thirty (30) percent of the gross lot area and be in conformance with the performance standards of Section 401.15.B.14 of this Ordinance.

c. Adequate analysis and provisions are made to resolve issues related to demand for services. No use shall be allowed that will exceed the City's ability to provide utility, police, fire, administrative or other services to the site.

d. The provisions of Section 401.03.A.7 of this Ordinance are considered and satisfactorily met.

8. Commercial PUD as regulated by Section 401.06 of this Ordinance.

9. Cellular telephone antennas not located on a public structure provided that:

a. The provisions of Section 401.03.A.7 and Section 401.15.P of this Ordinance are considered and satisfactorily met.

10. Manufacturing, compounding, assembly, packaging, treatment or storage of products and materials as accessory use provided that:

a. The proposed use complies with the performance standards outlined in Section 401.15.B and all other applicable provisions of this Ordinance.

b. All manufacturing and assembly operations shall be enclosed within a building.

c. Adequate analysis and provisions are made to resolve issues related to demand for services. No use shall be allowed that will exceed the City's ability to provide utility, police, fire, administrative or other services to the site.

d. The provisions of Section 401.03.A.7 of this Ordinance are considered and satisfactorily met.

11. Animal clinics provided that:

    a. There shall be no outdoor animal pens or runs.

    b. The provisions of Minnesota Pollution Control Agency Regulations SW 53(2) are complied with.

    c. All other applicable state and local regulations pertaining to nuisance, health and safety conditions, etc. are complied with.

    d. Adequate analysis and provisions are made to resolve issues related to demand for services. No use shall be allowed that will exceed the City's ability to provide utility, police, fire, administrative or other services to the site.

    e. The provisions of Section 401.03.A.8 of this Ordinance are considered and satisfactorily met.

12. Distribution centers provided that:

    a. The storage areas and loading docks are landscaped, fenced and screened from view of neighboring uses and abutting residential districts.

    b. The driveways, storage areas and loading docks are blacktopped or concrete surfaced.

    c. All lighting shall be hooded and so directed that the light source shall not be visible from the public right-of-way or from neighboring properties.

    d. A drainage system subject to the approval of the City shall be installed.

    e. Vehicular access points shall create a minimum of conflict through traffic movement.

    f. Provisions are made to control and reduce noise in accordance with Section 401.15.B.11 of this Ordinance.

    g. The proposed use complies with the performance standards outlined in Section 401.15.B and all other provisions of this Ordinance.

    h. Adequate analysis and provisions are made to resolve issues related to demand for services. No use shall be allowed that will exceed the City's ability to provide utility, police, fire, administrative or other services to the site.

    i. The provisions of Section 401.03.A.7 of this Ordinance are satisfactorily met.

13. Day treatment, human services and counseling programs provided that:

    a. Provisions are made to issue compatibility with surrounding uses.

    b. All State laws and statutes governing such use are strictly adhered to and all required operating permits are secured.

    c. Adequate off-street parking is provided in compliance with Section 401.15.F of this Ordinance.

    d. Adequate areas are provided for loading and unloading of vans, buses or other mass transit vehicles.

    e. Adequate analysis and provisions are made to resolve issues related to demand for services. No use shall be allowed that will exceed the City's ability to provide utility, police, fire, administrative or other services to the site.

    f. The provisions of Section 401.03.A.7 of this Ordinance are considered and satisfactorily met.

14. Continuing education programs, business, commercial and trade schools provided that:

    a. Provisions are made to issue compatibility with surrounding uses.

    b. All State laws and statutes governing such use are strictly adhered to and all required operating permits are secured.

    c. Adequate off-street parking is provided in compliance with Section 401.15.F of this Ordinance.

    d. Adequate areas are provided for loading and unloading of vans, buses or other mass transit vehicles.

    e. Adequate analysis and provisions are made to resolve issues related to demand for services. No use shall be allowed that will exceed the City's ability to provide utility, police, fire, administrative or other services to the site.

    f. The provisions of Section 401.03.A.7 of this Ordinance are considered and satisfactorily met.

15. Day care - group nursery provided that:

    a. Provisions are made to ensure compatibility with surrounding uses.

    b. Adequate area is provided within the plan for outdoor play areas.

c. All fire codes as applicable are complied with.

d. All applicable state and local regulations pertaining to child care facilities are complied with.

e. Adequate areas are provided for child drop-off.

f. Adequate analysis and provisions are made to resolve issues related to demand for services. No use shall be allowed that will exceed the City's ability to provide utility, police, fire, administrative or other services to the site.

g. The provisions of Section 401.03.A.8 of this Ordinance are considered and satisfactorily met.

[27]16. Buildings in excess of three (3) stories or thirty-five (35) feet provided that:

a. The site is capable of accommodating the increased intensity of use.

b. The increased intensity of use does not cause an increase in traffic volumes beyond the capacity of the surrounding streets.

c. Public utilities and services are adequate.

d. For each additional story over three (3) stories or for each additional ten (10) feet above thirty-five (35) feet, front and side yard setback requirements shall be increased ten (10) feet.

e. The project shall comply with the Minnesota Sustainable Building 2030 (SB2030) energy standards and Minnesota Sustainable Building Guidelines (B3) or as amended.

f. There shall be no parking in the yards facing adjacent rights of way.

g. On the third and upper floors, windows and/or architectural features that provide interest shall be included on all four sides of the building when permitted within the building code.

h. Abrupt changes in building heights and/or roof orientation shall be diminished by offsets of building form and mass.

i. Recesses and projections to visually divide building surfaces into smaller scale elements shall be included.

j. Color shall be used to visually reduce the size, bulk and scale of the building.

k. Buildings forty (40) feet or over shall provide rooflines with articulated features.

l. Location of back flow prevention devices and the fire sprinkler riser shall be identified on project plans submitted for site and design review and shall be located inside the building.

m. The provisions of Section 401.03.A.8 of this Ordinance are considered and satisfactorily met.

[37]17. Car washes (drive through, mechanical and self-service) provided that:

a. The architectural appearance and functional plan of the building and site shall not be dissimilar to the existing buildings or area as to cause impairment in property values or constitute a blighting influence within a reasonable distance on the lot.

b. Magazining or stacking space is constructed to accommodate that number of vehicles which can be washed during a maximum thirty (30) minute period and shall be subject to the approval of the City Engineer.

c. At the boundaries of a residential district, a strip of not less than ten (10) feet shall be landscaped and screened in compliance with Section 401.15.E of this Ordinance.

d. Parking or car magazining storage space shall be screened from view of abutting residential districts in compliance with Section 401.15.E. of this Ordinance.

e. The entire area other than occupied by the building or plantings shall be surfaced with material which will control dust and drainage which is subject to approval of the City Engineer.

f. The entire are shall have a drainage system which is subject to the approval of the City Engineer.

g. All lighting shall be hooded and so directed that the light source is not visible from the public right-of-way or from an abutting residence and shall be in compliance with Section 401.15.B.7 of this Ordinance.

h. Vehicular access points shall be limited, shall create a minimum of conflict with through traffic movement and shall be subject to the approval of the City Engineer.

i. All signing and informational or visual communication devices shall be in compliance with Section 401.15.G. of this Ordinance.

j. Provisions are made to control and reduce noise.

k. The provisions of Section 401.03.A.7 of this Ordinance are considered and satisfactorily met.

[37]18. Motor fuel station, auto repair-minor and tire and battery stores and service, provided that:

a. Regardless of whether the dispensing, sale or offering for sale of motor fuels and/or oil is incidental to the conduct of the use or business, the standards and requirements imposed by this Ordinance for motor fuel stations shall apply. These standards and requirements are, however, in addition to other requirements which are imposed for other uses of the property.

b. The architectural appearance and functional plan of the building and site shall not be so dissimilar to the existing buildings or area as to cause impairment in property values or constitute a blighting influence within a reasonable distance on the lot.

c. The entire site other than that taken up by a building, structure or plantings shall be surfaced with a material to control dust and drainage which is subject to the approval of the City Engineer.

d. A minimum lot area of twenty thousand (20,000) square feet and minimum lot widths of one hundred fifty (150) feet.

e. A drainage system subject to the approval of the City Engineer shall be installed.

f. A curb not less than six (6) inches above grade shall separate the public sidewalk from motor vehicle service areas.

g. The lighting shall be accomplished in such a way as to have no direct source of light visible from adjacent land in residential use or from the public right-of-way and shall be in compliance with Section 401.15.B.7 of this Ordinance.

h. Wherever fuel pumps are to be installed, pump islands shall be installed.

i. At the boundaries of a residential district, a strip of not less than ten (10) feet shall be landscaped and screened in compliance with Section 401.15.E of this Ordinance.

j. Parking or car magazine storage space shall be screened from view of abutting residential districts in compliance with Section 401.15.E. of this Ordinance.

k. Vehicular access points shall be limited, shall create a minimum of conflict with through traffic movement and shall be subject to the approval of the City Engineer.

l. All signing and informational or visual communication devices shall be minimized and shall be in compliance with Section 401.15.G. of this Ordinance.

m. Provisions are made to control and reduce noise.

n. No outside storage except as allowed in compliance with Section 401.30.E.5 if this Ordinance.

o. Sale of products other than those specifically mentioned in this subdivision shall be subject to a conditional use permit and be in compliance with Section 401.30.E.6 of this Ordinance

p. All conditions pertaining to a specific site are subject to change when the Council, upon investigation in relation to a formal request, finds that the general welfare and public betterment can be served as well or better by modifying the conditions.

q. The provisions of Section 401.03.A.7 of this Ordinance are considered and satisfactorily met.

r. The City may allow a motor fuel pump canopy to encroach ten (10) feet into a required setback provided the canopy support structure does not encroach on the setback and that the setback encroachment will not result in an obstruction of traffic visibility.

401.300.F. Access.

1. Access to industrial development shall be allowed only on arterial or collector streets, or a street specifically designed for such development.

2. Curb cut widths and locations shall comply with the provisions of Section 401.15.F.4.H.8.

3. Industrial developments of a small scale shall be encouraged to develop a common access drive and parking facilities. Incentives, such as reduction in setback and/or parking requirements may be provided at the discretion of the City Council.

4. A turning lane and its appropriate right-of-way must be provided if the City Council determines that one is needed.

401.300.G. Lot Coverage. Not less than twenty (20) percent of the buildable portion of the lot, parcel or tract of land shall remain as a grass plot including fencing and landscaping with shrubbery and plantings. A lesser area may be devoted to a grass plot only via a conditional use permit, provided that:

1. An allowance is made for increased amenities, landscaping or quality of construction as determined by the City Council.

2. In no case shall less than ten (10) percent of the buildable portion of the lot, parcel or tract of land remain as a grass plot.

3. The provisions of Section 401.03 of the Ordinance are considered and satisfactorily met.

401.300.H. Building Type and Construction. All building materials and construction must be in conformance with Section 401.15.C.8 of this Ordinance and the Design Guidelines.

401.300.I. Parking. Detailed parking plans in accordance with Section 401.15.F of this Ordinance and the additional requirements of the section listed below, shall be submitted for City review and approved before a building permit may be obtained.

1. The parking area shall be set back a minimum of ten (10) feet from any property line.

2. The parking lot in front of the building shall be screened from the public right-of-way and from adjoining property in conformance with the provisions of Section 401.15.E. of this Ordinance.

3. All parking areas and driveways shall be surfaced with asphalt, concrete, cobblestone or paving brick.

4. Perimeter curbing shall be required around entire parking lots, no closer than ten (10) feet from any lot line.

5. Any lighting used to illuminate an off-street parking area shall be hooded and so arranged as to reflect light away from adjoining property, abutting residential uses and public rights-of-way.

6. Grass, plantings, or screening shall be provided in all areas bordering the parking lot. The screening shall be strictly vegetation, earth berming, or a combination of the two.

7. The screening shall occur, at a minimum, along the outermost medians of the parking area, at every second median within the lot, and at the ends of each parking row.

8. The medians shall not exceed three (3) feet in height, nor be at a slope greater than twenty (20) percent.

401.300.J. Loading. Any structure erected or altered for a use which requires the receipt or distribution of materials or merchandise by trucks or similar vehicles shall provide off-street loading space in conformance with the provisions of Section 401.15.F of this Ordinance and the following additional requirements:

1. A detailed off-street loading plan including berths, area, and access shall be submitted to the City for review and approval prior to issuance of a building permit.

2. The location of the loading area shall not be in the front of the building.

3. All areas intended to be used for loading including access shall be surfaced with bituminous or concrete.

4. All loading areas shall be screened from surrounding areas by means of vegetative plantings, berming, and/or a screening fence specified as follows:

    a. A vegetative planting strip or grouping shall consist of evergreen trees and/or deciduous trees and plants and shall be of sufficient width and density to provide an effective visual screen. This planting area shall be designed to provide complete visual screening to a minimum height of six (6) feet. Earth mounding or berms may be used but shall not be used to achieve more than three (3) feet of the required screen. The planting plan and type of plantings shall require the approval of the City Council.

    b. A required screening fence shall be constructed of masonry, brick, or wood. Such fence shall provide a solid screening effect eight (8) feet in height. The design and materials used in constructing a required screening fence shall be subject to the approval of the City Council. Fences in excess of eight (8) feet in height shall require approval of the Zoning Administrator and Building Official.

401.300.K. Trash Receptacles. All buildings in which exterior storage, trash storage, and/or handling is provided shall provide an enclosed trash receptacle area in conformance with the following:

1. Exterior wall treatment shall be similar and/or complement the principal building.

2. The enclosed trash receptacle area shall be located in the rear of side yard.

3. The trash enclosure must be an accessible location for pick up hauling vehicles.

4. The trash enclosure must be fully screened from view of adjacent properties.

5. Construction of the trash receptacle enclosure is subject to approval of the City Building Official.

401.300.L. Screening. The screening of outdoor storage areas, heating/air conditioning units, exhaust/fan equipment, trash receptacles, rooftop equipment, and other deterrent elements shall be screened from all surrounding areas by means of planting, berming, and/or a screening fence or other means determined appropriate by the City Building Official. The planting and Berming specifications listed in Section 401.15.E. of this Ordinance are also applicable in this case, however, the height of the screening fence need only be of sufficient height to completely and safely conceal the deterrent element.

401.300.M. Landscaping. A detailed landscaping plan in conformance with Section 401.15.E. of this Ordinance shall be submitted to the City Council and approved before a building permit may be obtained and shall be in conformance with the following requirements.

1. The regulations and requirements set forth in the zoning and subdivision regulations shall apply to all vegetative treatments within the study area relative to the quality, sizes, and specifications of plant materials.

2. All landscape and vegetative treatments shall be in conformance with the overall site plan. It is the responsibility of the property owner to meet and maintain this requirement.

3. Unique land features, i.e., topography, vegetation, wetlands, drainageways shall be preserved and/or addressed to achieve the most positive functional and aesthetic results. Every effort should be made to preserve features of the land to create passive open spaces.

[16] 401.301 B-4, LIMITED BUSINESS DISTRICT

401.301.A. Purpose. The purpose of the B-4, Limited Business District is to provide a district accommodating retail sales, service and office functions in a highly planned and coordinated area. The uses allowed in this district are similar to but not as extensive, especially as it relates to automotive vehicle sales and service, as the B-2, General Business District.

401.301.B. Permitted Uses. The following are permitted uses in a B-4 District:

1. Any permitted use in the B-1 District.

2. Banks, savings institutions, credit unions and other financial institutions including drive-throughs.

3. Business or commercial schools.

4. Clinics, for people only.

5. Day care - group nursery (within single occupancy freestanding building).

6. Government and public utility buildings.

7. Motels, motor hotels and hotels provided that the lot area contains not less than five hundred (500) square feet of lot area per unit.

8. Restaurants, cafes, tea rooms, taverns and off-sale liquor.

9. Retail sales.

10. Commercial service uses.

11. Commercial recreation.

12. Libraries.

13. Offices, business or professional, including ticket sales.

14. Optical laboratories.

15. Pet stores.

16. Sexually oriented use - principal and accessory.

17. Theaters, excluding drive-in type of service.

18. Club or lodge halls serving food and beverage.

19. Parking or garages, other than those accessory to a principal use, for the parking and storage of private passenger vehicles only.

20. Rental services conducted entirely within a building.

21. Artistic and handicraft uses such as artists studios, ceramic shop, pottery works, candle making, light metal working, provided at least twenty-five (25) percent of the total floor space at the front of the building on the street level is used for sales and display purposes.

401.301.C. Interim Uses. The following are interim uses in a B-4 District:

1. None.

401.301.D. Accessory Uses. The following are permitted accessory uses in a B-4 District:

1. All permitted accessory uses as allowed in a B-1 District.

2. Semi-Truck parking.

[28] 3. Temporary outside sales, such as garden centers, garden produce sales, fireworks sales, or holiday decoration/tree sales as a yearly administrative permit subject to review and approval of the Zoning Administrator and subject to the following conditions:

   a. Outside sales are fenced or screened from view of neighboring residential uses or an abutting residential district in compliance with Section 401.15.E of this Ordinance.

   b. All lighting shall be hooded and so directed that the light source shall not be visible from the public right-of-way or neighboring residences and shall be in compliance with Section 401.15.B.7 of this Ordinance.

   c. Sales and storage area is blacktopped or concrete surfaced.

   d. The architectural appearance, scale, construction materials, and functional plan of the structure and site shall not cause impairment in property values, or constitute a blighting influence within a reasonable distance of the site.

e. Adequate analysis and provisions are made to resolve issues related to provision of water and electricity to the site and the demand for City services. No use shall be allowed that will exceed the City's ability to provide utility, police, fire, administrative or other services to the site.

f. Facilities on site shall not be operated between the hours of 10:00 PM and 6:00 AM unless otherwise allowed by formal action of the City Council.

g. Provisions are made to control and reduce noise in accordance with Section 401.15.B.11 of this Ordinance.

h. If the use is covering existing parking stalls, there shall be adequate excess parking on site so that all parking requirements are complied with.

i. The location of the use shall create a minimum of conflict with traffic movement, shall comply with Section 401.15.F of this Ordinance, and shall be subject to the approval of the City Engineer.

j. Any required drainage systems shall be subject to the approval of the City Engineer and reviewed by applicable watershed if required.

k. All signing and informational or visual communication devices shall be minimized and shall be in compliance with Section 401.15.G of this Ordinance.

l. The provisions of Section 401.03.A.7 of this Ordinance are considered and satisfactorily met.

m. The owner of the property must additionally approve the placement of the temporary facilities by co-signing any required application; if such vendor is not directly related to the owner, the owner shall also be subject to additional enforcement actions should the vendor not comply with requirements herein or within this Ordinance.

n. The City may revoke the Temporary Outside Sales Permit at any time should the operation become a public nuisance or hazard as defined by the City.

o. One Temporary Outside Sales Permit shall be allowed per site. No Temporary Outside Sales Permit shall exceed 120 calendar days per year. The City Administrator may issue 30 calendar days extensions if applied for prior to the conclusion of the initial 120 day time period.

[29] 4. Animal care services to include daycare, grooming and other related services, and limited overnight boarding of animals as a yearly administrative permit subject to review and approval of the Zoning Administrator and subject to the following conditions:

a. Overnight boarding of an animal is limited to no more than fourteen consecutive nights.

b. Adequate analysis and provisions are made to resolve issues related to provision of water and electricity to the site and the demand for City services. No use shall be allowed that will exceed the City's ability to provide utility, police, fire, administrative or other services to the site.

c. The facility shall not be open to the public between the hours of 10:00 PM and 5:00 AM unless otherwise allowed by formal action of the City Council.

d. Provisions are made to control and reduce noise in accordance with Section 401.15.B.11 of this Ordinance. Animal noise shall not create issues for adjacent properties or for tenants within a multi-tenant building.

e. All animal waste shall be immediately disposed of in sealed containers and removed from the site on a regular basis so as not to create issues with odor. Odor from the business shall not create issues for adjacent properties or tenants within a multi-tenant building.

f. Animals shall be leashed at all times they are outside of the building.

g. The owner of the property must additionally approve the placement of the facilities by co-signing any required application; if such vendor is not directly related to the owner, the owner shall also be subject to additional enforcement actions should the vendor not comply with requirements herein or within this Ordinance.

h. The City may revoke the Animal Care Services Permit at any time should the operations become a public nuisance or hazard as defined by the City.

i. All signing and informational or visual communication devices shall be minimized and shall be in compliance with Section 401.15.G of this Ordinance.

j. The provisions of Section 401.03.A.7 of this Ordinance are considered and satisfactorily met.

401.301.E. Conditional Uses. The following are conditional uses in a B-4 District: (Requires a conditional use permit based upon procedures set forth in and regulated by Section 401.03 of this Ordinance).

1. Drive-in and convenience food establishments provided that:

a. The architectural appearance and functional plan of the building and site shall not be so dissimilar to the existing buildings or area as to cause impairment in property values or constitute a blighting influence within a reasonable distance of the lot. All buildings shall comply with the City's Design Guidelines.

b. At the boundaries of a residential district, a strip of not less than ten (10) feet shall be landscaped and screened in compliance with Section 401.15.E. of this Ordinance.

c. Each light standard island and all islands in the parking lot landscaped or covered.

d. Parking areas shall be screened from view of abutting residential districts in compliance with Section 401.15.E. of this Ordinance.

e. Parking areas and driveways shall be curbed with continuous curbs not less than six (6) inches high above the parking lot or driveway grade.

f. Vehicular access points shall be limited, shall create a minimum of conflict with through traffic movements, shall comply with Section 401.15.F. of this Ordinance and shall be subject to approval of the City Engineer.

g. All lighting shall be hooded and so directed that the light source is not visible from the public right-of-way or from an abutting residence and shall be in compliance with Section 401.15.B.7 of this Ordinance.

h. The entire area shall have a drainage system which is subject to the approval of the City Engineer.

i. The entire area other than occupied by buildings or structures or plantings shall be surfaced with a material which will control dust and drainage and which is subject to the approval of the City Engineer.

j. All signing and informational or visual communication devices shall be in compliance with Section 401.15.G. of this Ordinance.

k. The provisions of Section 401.03.A.8 of this Ordinance are considered and satisfactorily met.

2. Auto repair-minor and tire and battery stores and service, provided that the use is accessory to and internally located within a retail sales operation:

a. The architectural appearance and functional plan of the building and site shall not be so dissimilar to the existing buildings or area as to cause impairment in property values or constitute a blighting influence within a

reasonable distance of the lot. All buildings shall comply with the City's Design Guidelines.

b. The entire site other than that taken up by a building, structure or plantings shall be surfaced with a material to control dust and drainage which is subject to the approval of the City Engineer.

c. A minimum lot area of twenty thousand (20,000) square feet and minimum lot widths of one hundred fifty (150) feet.

d. A drainage system subject to the approval of the City Engineer shall be installed.

e. A curb not less than six (6) inches above grade shall separate the public sidewalk from motor vehicle service areas.

f. The lighting shall be accomplished in such a way as to have no direct source of light visible from adjacent land in residential use or from the public right-of-way and shall be in compliance with Section 401.15.B.7 of this Ordinance.

g. At the boundaries of a residential district, a strip of not less than ten (10) feet shall be landscaped and screened in compliance with Section 401.15.E. of this Ordinance.

h. Parking spaces shall be screened from view of abutting residential districts in compliance with Section 401.15.E. of this Ordinance.

i. Vehicular access points shall create a minimum of conflict with through traffic movement, shall comply with Section 401.15.F. of this Ordinance and shall be subject to the approval of the City Engineer.

j. All signing and informational or visual communication devices shall be minimized and shall be in compliance with Section 401.15.G. of this Ordinance.

k. Provisions are made to control and reduce noise.

l. No outside storage except as allowed in compliance with Section 401.301.E.5 of this Ordinance.

m. Sale or products other than those specifically mentioned in this subdivision be subject to a conditional use permit and be in compliance with Section 401.301.E.6 of this Ordinance.

n. All conditions pertaining to a specific site are subject to change when the Council, upon investigation in relation to a formal request, finds that the

general welfare and public betterment can be served as well or better by modifying the conditions.

o. The provisions of Section 401.03.A.8 of this Ordinance are considered and satisfactorily met.

3. Custom manufacturing, restricted production and repair limited to the following: art, needlework, jewelry from precious metals, watches, dentures, optical lenses and medical supplies, provided that:

a. Such use is accessory as defined by Section 401.02.B. of this Ordinance to the principal use of the property.

b. Does not conflict with the character of development intended for this district.

c. The provisions of Section 401.03.A.8 of this Ordinance are considered and satisfactorily met.

4. Open and outdoor storage as an accessory use provided that:

a. The area is fenced and screened from view of neighboring residential uses or if abutting a residential district in compliance with Section 401.15.E. of this Ordinance.

b. Storage is screened from view from public right-of-way in compliance with Section 401.15.E. of this Ordinance.

c. Storage area is grassed or surfaced to control dust.

d. All lighting shall be hooded and so directed that the light source shall not be visible from the public right-of-way or from neighboring residences and shall be in compliance with Section 401.15.B.7 of this Ordinance.

e. The provisions of Section 401.03.A.8 of this Ordinance are considered and satisfactorily met.

5. Open or outdoor service, sale and rental as an accessory use, but not including new or used automotive, truck, motorcycle or semi-trailer rental or sales lots, provided that:

a. Outside service, sales and equipment rental connected with the principal use is limited to thirty (30) percent of the gross floor area of the principal use.

b. Outside sales areas are fenced or screened from view of neighboring residential uses or an abutting residential district in compliance with Section 401.15.E. of this Ordinance.

c. All lighting shall be hooded and so directed that the light source shall not be visible from the public right-of-way or from neighboring residences and shall be in compliance with Section 401.15.B.7 of this Ordinance.

d. Sales area is grassed or surfaced to control dust.

e. The provisions of Section 401.03.A.8 of this Ordinance are considered and satisfactorily met.

f. Boats, jet-skis, ATVs and other small motorized vehicles are stored indoors at night.

6. Commercial planned unit development as regulated by Section 401.06 of this Ordinance.

7. Day care - group nursery (within multiple occupancy building) provided that:

a. Use Compatibility. The operation and function of the day care facility must be compatible with other existing uses within the building. This compatibility is to be based upon the nature of the day care use in relation to the operation of the other existing uses within the building and the satisfactory resolution of conditions (b through g) of this Ordinance.

b. Building Plans. The building plans for the construction or alteration of a structure that is to be used for a day care facility shall be submitted to the City for review by the City Building Official to determine compliance with the State Building Code. The facility shall also meet the following conditions:

1) The architectural appearance and functional plan of the building and site shall not be so dissimilar to the existing buildings or area as to cause impairment of property values or constitute a blighting influence within a residential distance of the lot.

2) The day care facility shall be located in a portion of the building separated from the other uses located within the structure.

3) The day care facility shall be adequately sound-proofed to remove extraneous noise that would interfere with the day care operation and would affect the health, safety and welfare of the day care participants. Adequate sound-proofing must also be provided to prevent disruptive noise generated by the day care facility from interfering with the operation of the adjacent uses within the building.

4) Internal and external site land use compatibility and sufficient peripheral area protection shall be provided by the day care facility.

c. Screening. Where any outdoor recreational or play area for the day care facility abuts any commercial or industrial use or zoned property, the play area shall be screened along all exposed perimeters. All of the required fencing and screening shall comply with the fencing and screening requirements in Section 401.15.E. of this Ordinance.

d. Parking. When a day care facility is within a structure containing another principal use, each use shall be calculated separately for determining the total off-street parking spaces required.

e. Loading. One (1) off-street loading space in compliance with Section 401.15.F. of this Ordinance shall be provided.

f. Signage. All signing and informational or visual communication devices shall be in compliance with Section 401.15.G. of this Ordinance.

g. Conditional Use and State Regulations. Day care group nursery facilities shall be subject to the regulations and procedures of Section 401.03 of this Ordinance and the minimum licensing requirements, as may be amended, of the Minnesota Department of Human Services.

8. Cellular telephone antennas not located on a public structure, provided that:

a. The provisions of Section 401.03.A.8 and Section 401.15.P of this Ordinance are considered and satisfactorily.

9. Two family, townhomes and multiple family dwellings provided that:

a. At least two parking spaces per unit must be provided on site, or proof is shown of arrangements for private parking nearby.

b. No physical improvements, either interior or exterior, may preclude future re-use for commercial purposes.

c. Unit floor areas must comply with Section 401.15.C.6.

d. Compliance with conditional use requirements of Section 401.03.A.8.

e. The development does not conflict with existing or potential future commercial uses and activities

f. The density, setbacks, and building height standards imposed as part of the R-3 Zoning District are complied with.

g. Adequate open space and recreational space is provided on site for the benefit of the occupants.

h. The development does not conflict or result in incompatible land use arrangements as related to abutting residential uses or commercial uses.

i. Residential use be governed by all applicable standards of the Zoning Ordinance, Building Code, Housing Code and Fire Codes.

j. Residential and non-residential uses shall not be contained on the same floor.

k. Residential uses shall be provided with a separate entrance, and separately identified parking stalls.

l. The architectural appearance, design and building materials of residential structures shall be consistent with the Design Guidelines and subject to approval of the City Council.

10. Buildings in excess of three (3) stories or thirty-five (35) feet, provided that:

a. The site is capable of accommodating the increased intensity of use.

b. The increased intensity of use does not cause an increase in traffic volumes beyond the capacity of the surrounding streets.

c. Public utilities and services are adequate.

27 d. For each additional story over three (3) stories or for each additional ten (10) feet above thirty-five (35) feet, front and side yard setback requirements shall be increased ten (10) feet.

27 e. The project shall comply with the Minnesota Sustainable Building 2030 (SB2030) energy standards and Minnesota Sustainable Building Guidelines (B3) or as amended.

27 f. There shall be no parking in the yards facing adjacent rights of way.

27 g. On the third and upper floors, windows and/or architectural features that provide interest shall be included on all four sides of the building when permitted within the building code.

27 h. Abrupt changes in building heights and/or roof orientation shall be diminished by offsets of building form and mass.

27 i. Recesses and projections to visually divide building surfaces into smaller scale elements shall be included.

27 j. Color shall be used to visually reduce the size, bulk and scale of the building.

27 k. Buildings forty (40) feet or over shall provide rooflines with articulated features.

27 l. Location of back flow prevention devices and the fire sprinkler riser shall be identified on project plans submitted for site and design review and shall be located inside the building.

27 m. The provisions of Section 401.03.A.8 of this Ordinance are considered and satisfactorily met.

401.31. B-W, BUSINESS/WAREHOUSING DISTRICT

401.31.A. Purpose. The purpose of the B-W, Business/Warehousing District is to provide for the establishment of wholesale and retail trade of large volume or bulk commercial items, storage and warehousing. The overall character of the B-W District is intended to be transitional in nature, thus industrial uses allowed within this district shall be limited to those which can compatibly exist adjacent to commercial and lower intensity activities.

401.31.B. Permitted Uses. The following are permitted uses in a B-W District:

1. Commercial printing establishments.

2. Commercial/professional offices.

3. Conference centers.

4. Essential services.

5. Governmental and public utility buildings and structures.

6. Indoor commercial recreation.

7. Laboratories.

8. Wholesale showrooms.

9. Cellular telephone antennas located on a public structure as regulated in Section 401.15.P of this Ordinance.

401.31.C. Interim Uses. The following are interim uses in a B-W District:

1. None.

401.31.D. Accessory Uses. The following are permitted accessory uses in a B-W District:

1. All permitted accessory uses allowed in a B-2 District.

[26] 2. Solar energy systems, ground source heat pumps and wind energy systems as regulated in Section 401.17 of this Ordinance.

401.31.E. Conditional Uses. The following are conditional uses in a B-W District (Requires a conditional use permit based upon procedures set forth in and regulated by Section 401.03 of this Ordinance):

1. Open and outdoor storage including the parking of commercial vehicles in excess of that allowed as a permitted accessory use as and accessory use provided that:

    a. The storage area is landscaped, fenced, and screened from view of neighboring uses and abutting residential districts.

    b. Storage is landscaped and screened from view from the public right-of-way.

    c. Storage area is blacktopped or concrete surfaced.

    d. All lighting shall be hooded and so directed that the light source shall not be visible from the public right-of-way or from neighboring residences.

    e. The storage area does not take up parking space or loading space as required for conformity to this Ordinance.

    f. The provisions of Section 401.03 of this Ordinance are considered and satisfactorily met.

2. Open or outdoor services, sale and rental as a principal or accessory use provided that:

    a. Outside services, sales and equipment rental connected with the principal use is limited to thirty (30) percent of the gross floor area of the principal use.

    b. Outside sales areas are landscaped and fenced or screened from view of neighboring residential uses or an abutting residential district.

    c. All lighting shall be hooded and so directed that the light source shall not be visible from the public right-of-way or from neighboring residences.

    d. Areas are asphalt or concrete surfaced.

    e. The use does not take up parking space or loading areas as required for conformity to this Ordinance.

    f. Additional parking, pursuant to Section 401.15.F of this Ordinance, is provided for said space.

    g. The provisions of Section 401.03.A.8 of this Ordinance are considered and satisfactorily met.

3. Manufacturing, compounding, assembly, packaging, treatment or storage of products and materials provided that:

   a. The proposed use complies with the performance standards outlined in Section 401.15.B and all other applicable provisions of this Ordinance.

   b. The provisions of Section 401.03.A.8 of this Ordinance are considered and satisfactorily met.

4. Planned unit development as regulated by Section 401.06 of this Ordinance.

5. Cellular telephone antennas not located on a public structure provided that:

   a. The provisions of Section 401.03.A.8 and Section 401.15.P of this Ordinance are considered and satisfactorily met.

401.31.F. Access.

1. Access to industrial development shall be allowed only on arterial or collector streets, or a street specifically designed for such development.

[1] 2. Curb cut widths and locations shall comply with the provisions of Section 401.15.F.4.H.8.

3. Industrial developments of a small scale shall be encouraged to develop a common access drive and parking facilities. Incentives, such as reduction in setback and/or parking requirements may be provided at the discretion of the City Council.

4. A turning lane and its appropriate right-of-way must be provided if the City Council determines that one is needed.

401.31.G. Lot Coverage. Not less than twenty (20) percent of the buildable portion of the lot, parcel or tract of land shall remain as a grass plot including fencing and landscaping with shrubbery and plantings. A lesser area may be devoted to a grass plot only via a conditional use permit, provided that:

1. An allowance is made for increased amenities, landscaping or quality of construction as determined by the City Council.

2. In no case shall less than ten (10) percent of the buildable portion of the lot, parcel or tract of land remain as a grass plot.

3. The provisions of Section 401.03 of this Ordinance are considered and satisfactorily met.

401.31.H. Building Type and Construction. All building materials and construction must be in conformance with Section 401.15.C.8. of this Ordinance.

401.31.I. Parking. Detailed parking plans in accordance with Section 401.15.F. of this Ordinance and the additional requirements of the section listed below, shall be submitted for City review and approved before a building permit may be obtained.

1. The parking area shall be set back a minimum of ten (10) feet from any property line.

2. The parking lot in front of the building shall be screened from the public right-of-way and from adjoining property in conformance with the provisions of Section 401.15.E. of this Ordinance.

3. All parking areas and driveways shall be surfaced with asphalt, concrete, cobblestone or paving brick.

4. Perimeter curbing shall be required around entire parking lots, no closer than five (5) feet from any lot line.

5. All parking stalls shall be marked with white painted lines not less than four (4) inches wide.

6. Any lighting used to illuminate an off-street parking area shall be hooded and so arranged as to reflect light away from adjoining property, abutting residential uses and public rights-of-way.

7. Grass, plantings, or screening shall be provided in all areas bordering the parking lot. The screening shall be strictly vegetation, earth berming, or a combination of the two.

8. The screening shall occur, at a minimum, along the outermost medians of the parking area, at every second median within the lot, and at the ends of each parking row.

9. The medians shall not exceed three (3) feet in height, nor be at a slope greater than twenty (20) percent.

401.31.J. Loading. Any structure erected or altered for a use which requires the receipt or distribution of materials or merchandise by trucks or similar vehicles shall provide off-street loading space in conformance with the provisions of Section 401.15.F of this Ordinance and the following additional requirements:

1. A detailed off-street loading plan including berths, area, and access shall be submitted to the City for review and approval prior to issuance of a building permit.

2. The location of the loading area shall not be in the front of the building.

3. All areas intended to be used for loading including access shall be surfaced with bituminous or concrete.

4. All loading areas shall be screened from surrounding areas by means of vegetative plantings, berming, and/or a screening fence specified as follows:

    a. A vegetative planting strip or grouping shall consist of evergreen trees and/or deciduous trees and plants and shall be of sufficient width and density to provide an effective visual screen. This planting area shall be designed to provide complete visual screening to a minimum height of six (6) feet. Earth mounding or berms may be used but shall not be used to achieve more than three (3) feet of the required screen. The planting plan and type of plantings shall require the approval of the City Council.

    b. A required screening fence shall be constructed of masonry, brick, or wood. Such fence shall provide a solid screening effect eight (8) feet in height. The design and materials used in constructing a required screening fence shall be subject to the approval of the City Council. Fences in excess of eight (8) feet in height shall require approval of the Zoning Administrator and Building Official.

401.31.K. Trash Receptacles. All buildings in which exterior storage, trash storage, and/or handling is provided shall provide an enclosed trash receptacle area in conformance with the following:

1. Exterior wall treatment shall be similar and/or complement the principal building.

2. The enclosed trash receptacle area shall be located in the rear of side yard.

3. The trash enclosure must be an accessible location for pick up hauling vehicles.

4. The trash enclosure must be fully screened from view of adjacent properties.

5. Construction of the trash receptacle enclosure is subject to approval of the City Building Official.

401.31.L. Screening. The screening of outdoor storage areas, heating/air conditioning units, exhaust/fan equipment, trash receptacles, rooftop equipment, and other deterrent elements shall be screened from all surrounding areas by means of planting, berming,

and/or a screening fence or other means determined appropriate by the City Building Official. The planting and Berming specifications listed in Section 401.15.E. of this Ordinance are also applicable in this case, however, the height of the screening fence need only be of sufficient height to completely and safely conceal the deterrent element.

401.31.M. Landscaping. A detailed landscaping plan in conformance with Section 401.15.E. of this Ordinance shall be submitted to the City Council and approved before a building permit may be obtained and shall be in conformance with the following requirements.

1. The regulations and requirements set forth in the zoning and subdivision regulations shall apply to all vegetative treatments within the study area relative to the quality, sizes, and specifications of plant materials.

2. All landscape and vegetative treatments shall be in conformance with the overall site plan. It is the responsibility of the property owner to meet and maintain this requirement.

3. Unique land features, i.e., topography, vegetation, wetlands, drainageways shall be preserved and/or addressed to achieve the most positive functional and aesthetic results. Every effort should be made to preserve features of the land to create passive open spaces.

401.32. I, INDUSTRIAL DISTRICT

401.32.A. Purpose. The purpose of the I, Industrial District is to provide for the establishment of warehousing and light industrial development.

401.32.B. Permitted Uses. The following are permitted uses in an I District:

1. Building material sales and storage.

2. Cartage and express facilities.

3. Electric light or power generating stations, electrical and electronic products manufacture, electrical service shops.

4. Essential services.

5. Governmental and public utility buildings and structures.

6. Laboratories.

7. Medical, dental and optical laboratories.

8. Research laboratories.

9. Storage or warehousing.

10. Wholesale business and office establishments.

11. Compounding, processing, packaging, treatment, or assembly of goods and materials where such use will not involve the risk of offensive odors, glare, smoke, dust, noise, vibrations, or other pollution extending beyond the lot on which the use is located. Such uses include, but are not limited to the following: lumber yard, machine shops, products, assembly, sheet metal shops, plastics, electronics, general vehicle repair (repair garage), body work and painting, contractor shops and storage yard, food and non-alcoholic beverages, signs and displays, printing, publishing, fabricated metal parts, appliances, clothing, textiles.

12. Cellular telephone antennas, including necessary equipment buildings, as regulated in Section 401.15.P of this Ordinance.

401.32.C. Interim Uses. The following are interim uses in an I District:

[14] 1. Temporary office and administrative structures provided that:

a. The provisions of Section 401.05 and Section 401.03.A.7 of this Ordinance are considered and satisfactorily met.

401.32.D. Accessory Uses. The following are permitted accessory uses in an I District:

1. All permitted accessory uses as allowed in the B-2 District.

[26] 2. Solar energy systems, ground source heat pumps and wind energy systems as regulated in Section 401.17 of this Ordinance.

401.32.E. Conditional Uses. The following are conditional uses in an I District: (Requires a conditional use permit based upon procedures set forth in and regulated by Section 401.03 of this Ordinance.)

1. Open and outdoor storage as an accessory use provided that:

a. The area is fenced and screened from view of neighboring residential uses or if abutting a residential district in compliance with Section 401.15.E. of this Ordinance.

b. Storage is screened from view from the public right-of-way in compliance with Section 401.15.E. of this Ordinance.

c. Storage area is grassed or surfaced to control dust.

d. All lighting shall be hooded and so directed that the light source shall not be visible from the public right-of-way or from neighboring residences and shall be in compliance with Section 401.15.B.7 of this Ordinance.

e. The provisions of Section 401.03.A.8 of this Ordinance are considered and satisfactorily met.

2. Commercial and public radio and television transmitting antennas, and public utility microwave antennas, provided that:

a. The provisions of Section 401.03.A.8 and Section 401.15.P of this Ordinance are considered and satisfactorily met.

3. Commercial, private and public satellite dish transmitting or receiving antennas in excess of two (2) meters in diameter, provided that:

   a. The provisions of Section 401.03.A.8 and Section 401.15.P of this Ordinance are considered and satisfactorily met.

[11] 401.320 P-I, PUBLIC-INSTITUTIONAL DISTRICT

401.320.A. Purpose. The P-I District is intended to provide a specific zoning district for facilities directed to serving the public and specialized government and semi-public uses. It is unique in that the primary objective of uses within this district is the provision of services, frequently on a non-profit basis, rather than the sale of goods or services. It is intended that uses within such a district will be compatible with adjoining development, and they will be located on or in proximity to a collector street or arterial street.

401.320.B. Permitted Uses.

1. Publicly owned civic or cultural buildings such as libraries, city offices, auditoriums, community centers, public administration buildings and historical sites.

2. Parks and recreational fields, structures and buildings.

3. Essential services and essential service structures necessary for the health, safety and general welfare of the community.

4. Cellular telephone antennas located on a public structure as regulated in Section 401.15.P of this Ordinance.

401.320.C. Interim Uses.

1. None.

401.320.D. Accessory Uses.

1. Accessory uses customarily incidental to the uses permitted in Sections 401.320.B, 401.320.C, and 401.320.D of this Ordinance.

2. Fences as regulated by Section 401.15.C of this Ordinance.

3. Off-street parking and loading areas regulated by Section 401.15.F of this Ordinance.

4. Parks, playgrounds, and athletic fields related to those uses permitted in Sections 401.320.B, 401.320.C, 401.320.D of this Ordinance.

5. Signage as regulated by Section 401.15.G of this Ordinance.

6. Radio and television receiving antennas including single dish TVROs two (2) meters or less in diameter, short-wave radio dispatching antennas, or those necessary for the operation of household electronic equipment including radio receivers, federally licensed amateur radio stations and television receivers, as regulated by Section 401.15.P of this Ordinance.

7. Day care nurseries for those uses permitted in Sections 401.320.B, 401.320.C, 401.320.D of this Ordinance, except for those related to a religious institution.

[26] 8. Solar energy systems, ground source heat pumps and wind energy systems as regulated in Section 401.17 of this Ordinance.

401.320.E. Conditional Uses.

1. Private and public pre-school, elementary, junior or senior high schools provided that:

   a. Adequate screening from abutting residential uses and landscaping is provided in compliance with Section 401.15.E. of this Ordinance.

   b. Adequate off-street parking and access is provided on the site or on lots directly abutting across a public street or alley to the principal use in compliance with Section 401.15.F. of this Ordinance and that such parking is adequately screened and landscaped from surrounding and abutting residential uses in compliance with Section 401.15.E. of this Ordinance.

   c. Adequate off-street loading and service entrances are provided and regulated where applicable by Section 401.03.F. of this Ordinance.

   d. Adequate emergency vehicle access is provided to and within the site.

   e. The site is served by an arterial or collector street of sufficient capacity to accommodate the traffic that will be generated.

   f. The provisions of Section 401.03.A.8 of this Ordinance are considered and satisfactorily met.

2. Private and public colleges, seminaries, and other institutions of higher education provided that:

   a. Adequate screening from abutting residential uses and landscaping is provided in compliance with Section 401.15.E. of this Ordinance.

b. Adequate off-street parking and access is provided on the site or on lots directly abutting across a public street or alley to the principal use in compliance with Section 401.15.F. of this Ordinance and that such parking is adequately screened and landscaped from surrounding and abutting residential uses in compliance with Section 401.15.E. of this Ordinance.

c. Adequate off-street loading and service entrances are provided and regulated where applicable by Section 401.03.F. of this Ordinance.

d. The site is served by an arterial or collector street of sufficient capacity to accommodate the traffic that will be generated.

e. The provisions of Section 401.03.A.8 of this Ordinance are considered and satisfactorily met.

3. Religious institutions, such as chapels, temples, synagogues, and mosques limited to worship and related social events provided that:

a. Adequate screening from abutting residential uses and landscaping is provided in compliance with Section 401.15.E. of this Ordinance.

b. Adequate off-street parking and access is provided on the site or on lots directly abutting across a public street or alley to the principal use in compliance with Section 401.15.F. of this Ordinance and that such parking is adequately screened and landscaped from surrounding and abutting residential uses in compliance with Section 401.15.E. of this Ordinance.

c. Adequate off-street loading and service entrances are provided and regulated where applicable by Section 401.03.F. of this Ordinance.

d. The site is served by an arterial or collector street of sufficient capacity to accommodate the traffic that will be generated.

e. The provisions of Section 401.03.A.8 of this Ordinance are considered and satisfactorily met.

4. Hospitals and residential care facilities provided that:

a. Only the rear yard shall be used for play or recreational areas. Said area shall be fenced and controlled and screened in compliance with Section 401.15.E. of this Ordinance.

b. All state laws and statutes governing such use are strictly adhered to and all required operating permits are secured.

c. Adequate screening from abutting residential uses and landscaping is provided in compliance with Section 401.15.E. of this Ordinance.

d. Adequate off-street parking and access is provided on the site or on lots directly abutting across a public street or alley to the principal use in compliance with Section 401.15.F. of this Ordinance and that such parking is adequately screened and landscaped from surrounding and abutting residential uses in compliance with Section 401.15.E. of this Ordinance.

e. Adequate off-street loading and service entrances are provided and regulated where applicable by Section 401.03.F. of this Ordinance.

f. The site is served by an arterial or collector street of sufficient capacity to accommodate the traffic that will be generated.

g. The provisions of Section 401.03.A.8 of this Ordinance are considered and satisfactorily met.

5. Correctional facilities and shelters provided that:

a. Facilities shall comply with all applicable codes and regulations and shall have, current and in effect, the appropriate state licenses.

b. On-site services and treatment shall be for residents and inmates of the facility only, and shall not be for non-residents or persons outside the facility.

c. All new buildings or additions to existing buildings shall be consistent with the scale and character of the buildings in the neighborhood. Exterior building materials shall also be harmonious with other buildings in the neighborhood.

d. No correctional facility shall be placed closer than one thousand three hundred twenty (1,320) feet from another licensed correctional facility or from any property designated on the Land Use Plan as residential and/or designated on the official zoning map as residential.

e. The conditional use permit is only valid as long as a valid state license is held by the operator of the facility where such license is required.

f. Appropriate transition to neighboring property shall be provided by landscaping and site design consistent with the City ordinances and policies.

g. Adequate screening from abutting residential uses and landscaping is provided in compliance with Section 401.15.E. of this Ordinance.

h. Adequate off-street parking and access is provided on the site or on lots directly abutting across a public street or alley to the principal use in compliance with Section 401.15.F. of this Ordinance and that such parking is adequately screened and landscaped from surrounding and abutting residential uses in compliance with Section 401.15.E. of this Ordinance.

i. Adequate off-street loading and service entrances are provided and regulated where applicable by Section 401.03.F. of this Ordinance.

j. The site is served by an arterial or collector street of sufficient capacity to accommodate the traffic that will be generated.

k. The provisions of Section 401.03.A.8 of this Ordinance are considered and satisfactorily met.

6. Nursing homes, residential care facilities, and similar group housing provided that:

a. Adequate screening from abutting residential uses and landscaping is provided in compliance with Section 401.15.E. of this Ordinance.

b. Adequate off-street parking and access is provided on the site or on lots directly abutting across a public street or alley to the principal use in compliance with Section 401.15.F. of this Ordinance and that such parking is adequately screened and landscaped from surrounding and abutting residential uses in compliance with Section 401.15.E. of this Ordinance.

c. Adequate off-street loading and service entrances are provided and regulated where applicable by Section 401.03.F. of this Ordinance.

d. The site is served by an arterial or collector street of sufficient capacity to accommodate the traffic that will be generated.

e. The provisions of Section 401.03.A.8 of this Ordinance are considered and satisfactorily met.

7. Outdoor recreation areas including golf courses, community clubs, swimming pools, and similar facilities provided that:

a. Adequate screening from abutting residential uses and landscaping is provided in compliance with Section 401.15.E. of this Ordinance.

b. Adequate off-street parking and access is provided on the site or on lots directly abutting across a public street or alley to the principal use in compliance with Section 401.15.F. of this Ordinance and that such parking is adequately screened and landscaped from surrounding and abutting residential uses in compliance with Section 401.15.E. of this Ordinance.

c. Adequate off-street loading and service entrances are provided and regulated where applicable by Section 401.03.F. of this Ordinance.

d. The provisions of Section 401.03.A.8 of this Ordinance are considered and satisfactorily met.

8. Day care, social services or other non-directly related worship activities an accessory use within a religious institutional building(s) provided that:

a. Adequate off-street loading and drop-off areas are provided and regulated where applicable by Section 401.03.F. of this Ordinance.

b. The provisions of Section 401.03.A.8 of this Ordinance are considered and satisfactorily met.

9. Governmental and public related utility buildings and structures necessary for the health, safety and general welfare of the community provided that:

a. Compatibility with the surrounding neighborhood is maintained through appropriate site planning and screening.

b. Adequate screening from abutting residential uses and landscaping is provided in compliance with Section 401.15.E of this Ordinance.

c. Equipment is completely enclosed in a permanent structure and outside storage areas are appropriately screened and landscaped.

d. Adequate off-street parking, loading and service entrances are provided and regulated by Section 401.03.F of this Ordinance.

e. The site is served by an arterial or collector street of sufficient capacity to accommodate the traffic that will be generated.

f. The provisions of Section 401.03.A.8 of this Ordinance are considered and satisfactorily met.

10. Cemeteries or memorial gardens provided that:

a. The site is landscaped and adequate screening from neighboring uses is provided in compliance with Section 401.15.E. of this Ordinance.

b. Adequate off-street parking and access is provided on the site or on lots directly abutting across a public street or alley to a principal use in compliance with Section 401.15.F of this Ordinance and that such parking is

adequately screened and landscaped from surrounding and abutting residential uses in compliance with Section 401.15.E of this Ordinance.

c. Compatibility with the surrounding neighborhood is maintained and required setbacks and side yard requirements are met.

d. The total land area of the use shall not exceed forty (40) acres.

e. The site is served by an arterial or collector street of sufficient capacity to accommodate the traffic that will be generated.

f. The provisions of Section 401.03.A.8 of this Ordinance are considered and satisfactorily met.

11. Living quarters which are provided as an accessory use to a principal, conditional or interim use in this Section, provided that:

a. The use shall not be used as a rental property.

b. A maximum of one (1) such dwelling shall be allowed.

c. There shall be a demonstrated need for such a facility.

d. The provisions of Section 401.03.A.8 of this Ordinance are considered and satisfactorily met.

12. Limited retail commercial activities and personal services, provided that:

a. Merchandise is sold at retail.

b. Personal services are limited to those uses and activities which are allowed as a permitted or permitted accessory use within the B-1 Zoning District.

c. The retail activity and personal services are located within a structure whose principal use is not commercial sales.

d. The retail activity and personal services shall not occupy more than fifteen (15) percent of the gross floor area of the building.

e. The retail activity and personal services are not located within a structure whose principal use is residential.

f. No directly or indirectly illuminated sign or sign in excess of ten (10) square feet identifying the name of the business shall be visible from the outside of the building.

g. No signs or posters of any type advertising products for sale or services shall be visible from the outside of the building.

h. The provisions of Section 401.03.A.8 of this Ordinance are considered and satisfactorily met.

[27]13. Buildings in excess of three (3) stories or thirty-five (35) feet provided that:

a. The site is capable of accommodating the increased intensity of use.

b. The increased intensity of use does not cause an increase in traffic volumes beyond the capacity of the surrounding streets.

c. Public utilities and services are adequate.

d. For each additional story over three (3) stories or for each additional ten (10) feet above thirty-five (35) feet, front and side yard setback requirements shall be increased ten (10) feet.

e. The project shall comply with the Minnesota Sustainable Building 2030 (SB2030) energy standards and Minnesota Sustainable Building Guidelines (B3) or as amended.

f. There shall be no parking in the yards facing adjacent rights of way.

g. On the third and upper floors, windows and/or architectural features that provide interest shall be included on all four sides of the building when permitted within the building code.

h. Abrupt changes in building heights and/or roof orientation shall be diminished by offsets of building form and mass.

i. Recesses and projections to visually divide building surfaces into smaller scale elements shall be included.

j. Color shall be used to visually reduce the size, bulk and scale of the building.

k. Buildings forty (40) feet or over shall provide rooflines with articulated features.

l. Location of back flow prevention devices and the fire sprinkler riser shall be identified on project plans submitted for site and design review and shall be located inside the building.

m. The provisions of Section 401.03.A.8 of this Ordinance are considered and satisfactorily met.

14. Reduction in lot area requirements provided that:

    a. The provisions of Section 401.03.A.8 of this Ordinance are considered and satisfactorily met.

15. Cellular telephone towers and antennas not located on a public structure, provided that:

    a. The provisions of Section 401.03.A.8 and Section 401.15.P of this Ordinance are considered and satisfactorily met.

401.320.F. Lot Requirements and Setbacks. The following minimum requirements shall be observed in a P-I District, subject to additional requirements, exceptions and modifications set forth in this Chapter.

1. Lot Area - Minimum Site Area:

    a. Elementary, Middle and High School Facilities (Grades K-12) or Colleges, Seminaries, and Other Institutions of Higher Education as a Principal Use: Fifteen (15) acres plus one (1) acre for each one hundred fifty (150) students of planned maximum enrollment.

    b. Hospitals: Ten (10) acres.

    c. Religious Institutions: Three (3) acres.

    d. Correctional Facilities and Shelters: Ten (10) acres.

    e. Other Uses: Two (2) acres, unless specified by conditional use permit.

2. Setbacks:

    a. Abutting a Residential District.

        1) Front Yard: Seventy-five (75) feet.

        2) Side Yard: Seventy-five (75) feet.

        3) Rear Yard: Seventy-five (75) feet.

b. Abutting a Non-Residential District.

1) Front Yard: Fifty (50) feet.

2) Side Yard, Corner Lot: Fifty (50) feet.

3) Side Yard, Interior Lot: Thirty (30) feet.

4) Rear Yard: Thirty (30) feet.

c. Specified Uses, Correctional Facilities/Shelters.

1) Front Yard: Two hundred (200) feet.

2) Side Yard: Four hundred (400) feet.

3) Rear Yard: Four hundred (400) feet.

3. Maximum Building Height.

a. Principal Buildings: Forty-five (45) feet.

b. Accessory Building: Twenty (20) feet.

401.33. PUD, PLANNED UNIT DEVELOPMENT DISTRICT

401.33.A. Purpose. The purpose of the PUD, Planned Unit Development District is to provide for the integration and coordination of land parcels as well as the combination of varying types of residential, commercial and industrial uses.

401.33.B. Application. All permitted, permitted accessory or conditional uses contained in Sections 401.22 through 401.32 of this Ordinance shall be treated as potentially permitted uses within a PUD District.

401.33.C. Special Procedures. Whether requested as a rezoning or initially established by City action alone, a PUD, Planned Unit Development District shall be established and governed subject to the amendment and procedure requirements as outlined in Section 401.03 of this Ordinance, plus the procedures and conditions imposed by Section 401.06 of this Ordinance.

401.34. RIVER IMPACT DISTRICT

401.34.A. Purpose. This Section is established to provide necessary protection to lands which fall within the designated regional floodplain and Lower St. Croix National Scenic Riverway area as defined by Minnesota Department of Natural Resources regulations.

401.34.B. District Boundary and Application. For purposes of this Ordinance, the River Impact District shall include all lands lying riverward from the Chicago, Milwaukee, St. Paul and Pacific Railroad right-of-way. Application of district regulations shall be imposed as an overlay upon currently applied zoning use districts.

401.34.C. Development Regulations. All development within the River Impact District shall be jointly regulated according to the following State regulations, adopted herein by reference, and all other applicable regulations provided for in this Ordinance.

1. Standards and Criteria for the Lower St. Croix National Scenic Riverway in Minnesota (Minn. Reg. NR 2200-2202, or as amended).

2. Statewide Standards and Criteria for Management of Floodplain Areas of Minnesota (Minnesota Statutes Chapter 103 F and 462, or as amended).

3. Statewide Standards for Management of Shoreland Areas (Minnesota Statutes, Chapter 105, Minnesota Regulations, Parts 6120.2500-6120.3900, or as amended).

4. Wetland Conservation Act 1991 (Minnesota Laws 1991, Chapter 354, or as amended).

5. St. Croix River Regional Flood Analysis, March 1973.

401.34.D. Development Permit Procedure. Any applicant seeking any form of building permit approval within the River Impact District shall first file for a conditional use permit and gain approval from the City Council, in accordance with Section 401.03.